FORTEC GROUP

Datasheet

AUO

G215HAN01.5

FORTEC UNITED STATES

FORTEC INTEGRATED

FORTEC UNITED KINGDOM

The information contained in this document has been carefully researched and is, to the best of our knowledge, accurate. However, we assume no liability for any product failures or damages, immediate or consequential, resulting from the use of the information provided herein. Our products are not intended for use in systems in which failures of product could result in personal injury. All trademarks mentioned herein are property of their respective owners. All specifications are subject to change without notice.

☐ **Preliminary Specification**
■ **Final Specification**

Module	21.5 Inch Color TFT-LCD
Model Name	G215HAN01.5

Company		**Approved by**	**Date**
		Flossie Chuang	2022/10/05
Checked & Approved by	**Date**	**Prepared by**	
		Eugene Yu	2022/10/05
		General Display Business Unit / AUO Display Plus Corporation	

AUO Display Plus Confidential
For FORTEC Internal Use Only
2026/10/16 15:03:16

© AUO Display Plus Corporation Proprietary

For FORTEC internal use only - provided by ricardobuchanan on 2026/10/16

Contents

1.0 Handling Precautions ..... 錯誤! 尚未定義書籤。
2.0 General Description **5**
2.1 Display Characteristics 5
2.2 Optical Characteristics 6
3.0 Functional Block Diagram **9**
4.0 Absolute Maximum Ratings **10**
4.1 TFT LCD Module 10
4.2 Absolute Ratings of Environment 10
5.0 Electrical characteristics **11**
5.1 TFT LCD Module 11
5.1.1 Power Specification 11
5.1.2 Signal Electrical Characteristics 12
5.2 Backlight Unit (OM) 13
6.0 Signal Characteristic **14**
6.1 Pixel Format Image 14
6.2 The input data format 15
6.3 Signal Description 16
6.4 Timing Characteristics 18
6.5 Timing diagram 19
6.6 Power ON/OFF Sequence 20
7.0 Connector & Pin Assignment **21**
7.1 TFT LCD Module 21
7.2 LED Backlight Unit: LED Connector 22
7.3 LED Connector Pin Assignment 22
8.0 Reliability Test **23**
9.0 Shipping Label & Packaging **24**
9.1 Shipping Label (on the rear side of TFT-LCD display) 24
9.2 Packaging 24
10.0 Mechanical Characteristics **26**
11 Safety **28**
11.1 Sharp Edge Requirements 28
11.2 Materials 28
11.2.1 Toxicity 28
11.2.2 Flammability 28
11.3 Capacitors 28
11.4 National Test Lab Requirement 28

© AUO Display Plus Corporation Proprietary

AUO Display Plus Confidential
For FORTEC Internal Use Only
20261016 15:03:16
For FORTEC internal use only - provided by ricardobuchanan on 2026/10/16

Record of Revision

<table>
<tr><th>Version & Date</th><th>Page</th><th>Old description</th><th>New Description</th></tr>
<tr><td>1.1</td><td>6</td><td>
<table>
<tr><td>Red x</td><td>(0.596)</td><td>(0.646)</td><td>(0.666)</td></tr>
<tr><td>Red y</td><td>(0.254)</td><td>(0.334)</td><td>(0.384)</td></tr>
<tr><td>Green x</td><td>(0.263)</td><td>(0.313)</td><td>(0.363)</td></tr>
<tr><td>Green y</td><td>(0.572)</td><td>(0.622)</td><td>(0.672)</td></tr>
<tr><td>Blue x</td><td>(0.104)</td><td>(0.154)</td><td>(0.204)</td></tr>
<tr><td>Blue y</td><td>(0.001)</td><td>(0.051)</td><td>(0.101)</td></tr>
</table>
</td><td>
<table>
<tr><td>Red x</td><td>(0.596)</td><td>(0.646)</td><td>(0.696)</td></tr>
<tr><td>Red y</td><td>(0.284)</td><td>(0.334)</td><td>(0.384)</td></tr>
<tr><td>Green x</td><td>(0.263)</td><td>(0.313)</td><td>(0.363)</td></tr>
<tr><td>Green y</td><td>(0.572)</td><td>(0.622)</td><td>(0.672)</td></tr>
<tr><td>Blue x</td><td>(0.104)</td><td>(0.154)</td><td>(0.204)</td></tr>
<tr><td>Blue y</td><td>(0.001)</td><td>(0.051)</td><td>(0.101)</td></tr>
</table>
</td></tr>
<tr><td></td><td>13</td><td>
<table>
<tr><th>Symbol</th><th>Parameter</th><th>Min.</th><th>Typ.</th><th>Max.</th><th>Unit</th></tr>
<tr><td>I_F</td><td>LED Supply Current</td><td>-</td><td>90</td><td>-</td><td>mA</td></tr>
<tr><td>V_F</td><td>LED Supply Voltage</td><td>-</td><td>3.07</td><td>3.20</td><td>Volt</td></tr>
<tr><td>P_{LED}</td><td>LED Power Consumption</td><td>-</td><td>0.277</td><td></td><td>Watt</td></tr>
<tr><td>LL</td><td>LED Life Time</td><td>50,000</td><td></td><td></td><td>Hrs</td></tr>
</table>
</td><td>
<table>
<tr><th>Symbol</th><th>Parameter</th><th>Min.</th><th>Typ.</th><th>Max.</th><th>Unit</th></tr>
<tr><td>I_F</td><td>LED Supply Current</td><td>-</td><td>90</td><td>-</td><td>mA</td></tr>
<tr><td>V_F</td><td>LED Supply Voltage</td><td>2.80</td><td>3.07</td><td>3.20</td><td>Volt</td></tr>
<tr><td>P_{LED}</td><td>LED Power Consumption</td><td>-</td><td>0.277</td><td></td><td>Watt</td></tr>
<tr><td>LL</td><td>LED Life Time</td><td>50,000</td><td></td><td></td><td>Hrs</td></tr>
</table>
</td></tr>
<tr><td></td><td></td><td></td><td></td></tr>
<tr><td></td><td></td><td></td><td></td></tr>
<tr><td></td><td></td><td></td><td></td></tr>
</table>

AUO Display Plus Confidential
For FORTEC Internal Use Only
20261016 15:03:16
AUO Display Plus Confidential
For FORTEC Internal Use Only
20261016 15:03:16
AUO Display Plus Confidential
For FORTEC Internal Use Only
20261016 15:03:16
AUO Display Plus Confidential

© AUO Display Plus Corporation Proprietary

For FORTEC internal use only - provided by ricardobuchanan on 2026/10/16

1. Operating Precautions

1) Since front polarizer is easily damaged, please be cautious and not to scratch it.
2) Be sure to turn off power supply when inserting or disconnecting from input connector.
3) Wipe off water drop immediately. Long contact with water may cause discoloration or spots.
4) When the panel surface is soiled, wipe it with absorbent cotton or soft cloth.
5) Since the panel is made of glass, it may be broken or cracked if dropped or bumped on hard surface.
6) To avoid ESD (Electro Static Discharde) damage, be sure to ground yourself before handling TFT-LCD Module.
7) Do not open nor modify the module assembly.
8) Do not press the reflector sheet at the back of the module to any direction.
9) In case if a module has to be put back into the packing container slot after it was taken out from the container, do not press the center of the LED light bar edge. Instead, press at the far ends of the LED light bar edge softly. Otherwise the TFT Module may be damaged.
10) At the insertion or removal of the Signal Interface Connector, be sure not to rotate nor tilt the Interface Connector of the TFT Module.
11) TFT-LCD Module is not allowed to be twisted & bent even force is added on module in a very short time. Please design your display product well to avoid external force applying to module by end-user directly.
12) Small amount of materials having no flammability grade is used in the LCD module. The LCD module should be supplied by power complied with requirements of Limited Power Source (IEC60950 or UL1950), or be applied exemption.
13) Severe temperature condition may result in different luminance, response time and lamp ignition voltage.
14) Continuous operating TFT-LCD display under low temperature environment may accelerate lamp exhaustion and reduce luminance dramatically.
15) The data on this specification sheet is applicable when LCD module is placed in landscape position.
16) Continuous displaying fixed pattern may induce image sticking. It's recommended to use screen saver or shuffle content periodically if fixed pattern is displayed on the screen.

AUO Display Plus Confidential
For FORTEC Internal Use Only
20261016 15:03:16

© AUO Display Plus Corporation Proprietary

For FORTEC internal use only - provided by ricardobuchanan on 2026/10/16

2.0 General Description

This specification applies to the 21.5 inch-wide Color AHVA (IPS-like) TFT-LCD Module G215HAN01.5. The display supports the FHD [1920(H) x 1080(V)] screen format and 16.7M colors. All input signals are LVDS interface compatible.

2.1 Display Characteristics

The following items are characteristics summary on the table under 25°C condition:

ITEMS	Unit	SPECIFICATIONS
Screen Diagonal	[mm]	546.86 (21.5")
Active Area	[mm]	476.064 (H) x 267.786 (V)
Pixels H x V		1920(x3) x 1080
Pixel Pitch	[um]	247.95 (per one triad) ×247.95
Pixel Arrangement		R.G.B. Vertical Stripe
Display Mode		AHVA Mode, Normally Black
White Luminance (Center)	[cd/m^2]	500 cd/m^2 (Typ.)
Contrast Ratio		1000 (Typ.)
Optical Response Time	[msec]	22
Nominal Input Voltage VDD	[Volt]	5 V (Typ)
Power Consumption (VDD line + LED line)	[Watt]	TTL: 20.03(Typ.) LCD module: PDD(Typ.)=2.3@White pattern, Fv=60Hz Backlight unit：P_{BLU} =(17.73W)(Typ.)
Weight	[Grams]	(1740g) (Typ.)
Physical Size	[mm]	497.6(H) x 292.2(V) x 10.6 (D) (Typ.)
Electrical Interface		Dual LVDS
Support Color		16.7M colors
Surface Treatment		Anti-Glare, 3H
RoHS Compliance		RoHS Compliance
Temperature Range Operating Storage (Shipping)	 [°C] [°C]	 -10~ 60 -20~ 60

© AUO Display Plus Corporation Proprietary

AUO Display Plus Confidential
For FORTEC Internal Use Only
20261016 15:03:16
For FORTEC internal use only - provided by ricardobuchanan on 2026/10/16

2.2 Optical Characteristics

The optical characteristics are measured under stable conditions at 25 °C:

Item	Unit	Conditions	Min.	Typ.	Max.	Note
Viewing Angle	[degree]	Horizontal (Right) CR >10 (Left)		89 89	- -	*2*
		Vertical (Up) CR > 10 (Down)		89 89	- -	
Contrast ratio		Normal Direction	800	1000	-	*3*
Response Time	[msec]	Raising Time (T_{rR})		12	22	*4*
		Falling Time (T_{rF})		10	20	
		Raising + Falling		22	42	
Color / Chromaticity Coordinates (CIE)		Red x	(0.596)	(0.646)	(0.696)	*5*
		Red y	(0.284)	(0.334)	(0.384)	
		Green x	(0.263)	(0.313)	(0.363)	
		Green y	(0.572)	(0.622)	(0.672)	
		Blue x	(0.104)	(0.154)	(0.204)	
		Blue y	(0.001)	(0.051)	(0.101)	
Color Coordinates (CIE) White		White x	0.263	0.313	0.363	
		White y	0.279	0.329	0.379	
Central Luminance	[cd/m^2]		400	500		*6*
Luminance Uniformity	[%]		(75)	(80)		*7*
Color Gamut	%			72		

AUO Display Plus Confidential
For FORTEC Internal Use Only
20261016 15:03:16

For FORTEC internal use only - provided by ricardobuchanan on 2026/10/16

Note 1: Measurement method

The LCD module should be stabilized at given temperature for 30 minutes to avoid abrupt temperature change during measuring (at surface 35ºC). In order to stabilize the luminance, the measurement should be executed after lighting Backlight for 30 minutes in a stable, windless and dark room.

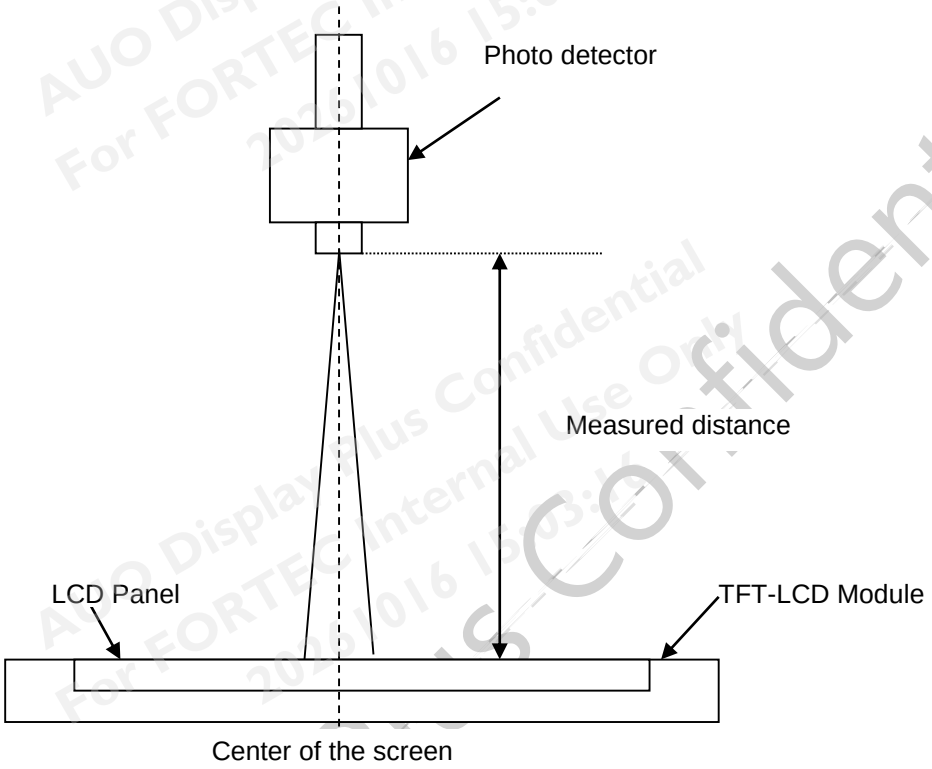

Note 2: Definition of viewing angle measured by ELDIM (EZContrast 88)

Viewing angle is the measurement of contrast ratio ≧10, at the screen center, over a 180° horizontal and 180° vertical range (off-normal viewing angles). The 180° viewing angle range is broken down as follows; 90° (θ) horizontal left and right and 90° (Φ) vertical, high (up) and low (down). The measurement direction is typically perpendicular to the display surface with the screen rotated about its center to develop the desired measurement viewing angle.

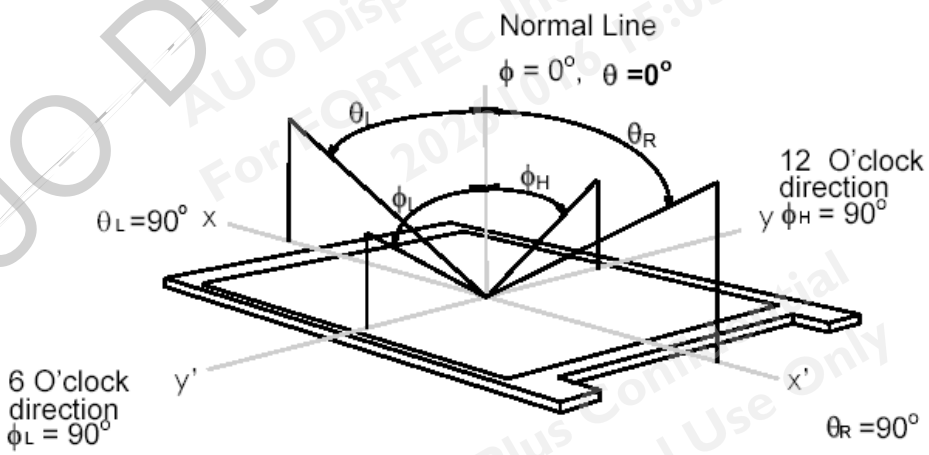

© AUO Display Plus Corporation Proprietary

For FORTEC internal use only - provided by ricardobuchanan on 2026/10/16

Note 3: Contrast ratio is measured by TOPCON SR-3

Note 4: Definition of Response time measured by Westar TRD-100A

The output signals of photo detector are measured when the input signals are changed from “Full Black” to “Full White” (rising time, Tr_R), and from “Full White” to “Full Black” (falling time, Tf_F), respectively. The response time is interval between the 10% and 90% (1 frame at 60 Hz) of amplitudes.
$Tr_R + Tf_F$ = 5 msec (typ.).

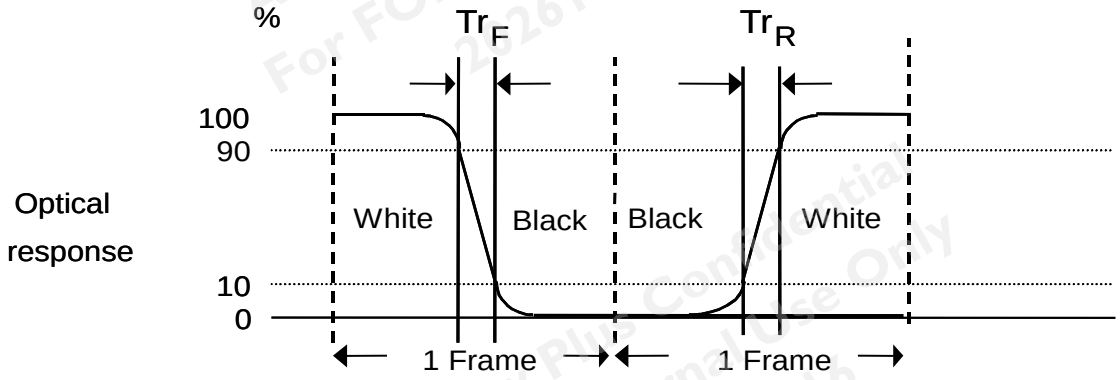

Note 5: Color chromaticity and coordinates (CIE) is measured by TOPCON SR-3

Note 6: Central luminance is measured by TOPCON SR-3

Note 7: Luminance uniformity of these 9 points is defined as below and measured by TOPCON SR-3

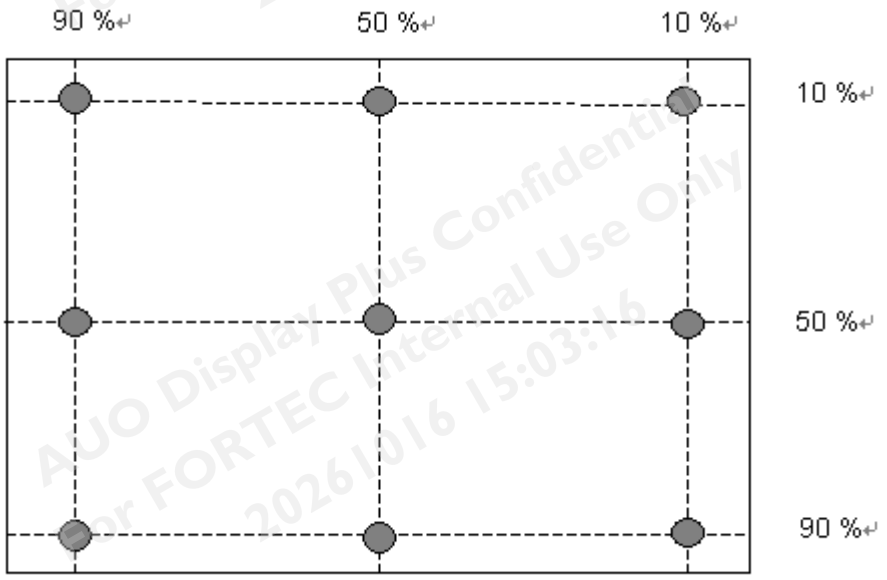

$$\text{Uniformity} = \frac{\text{Minimum Luminance in 9 points (1-9)}}{\text{Maximum Luminance in 9 Points (1-9)}}$$

© AUO Display Plus Corporation Proprietary

For FORTEC internal use only - provided by ricardobuchanan on 2026/10/16

3.0 Functional Block Diagram

The following diagram shows the functional block of the 21.5 inch Color TFT-LCD Module:

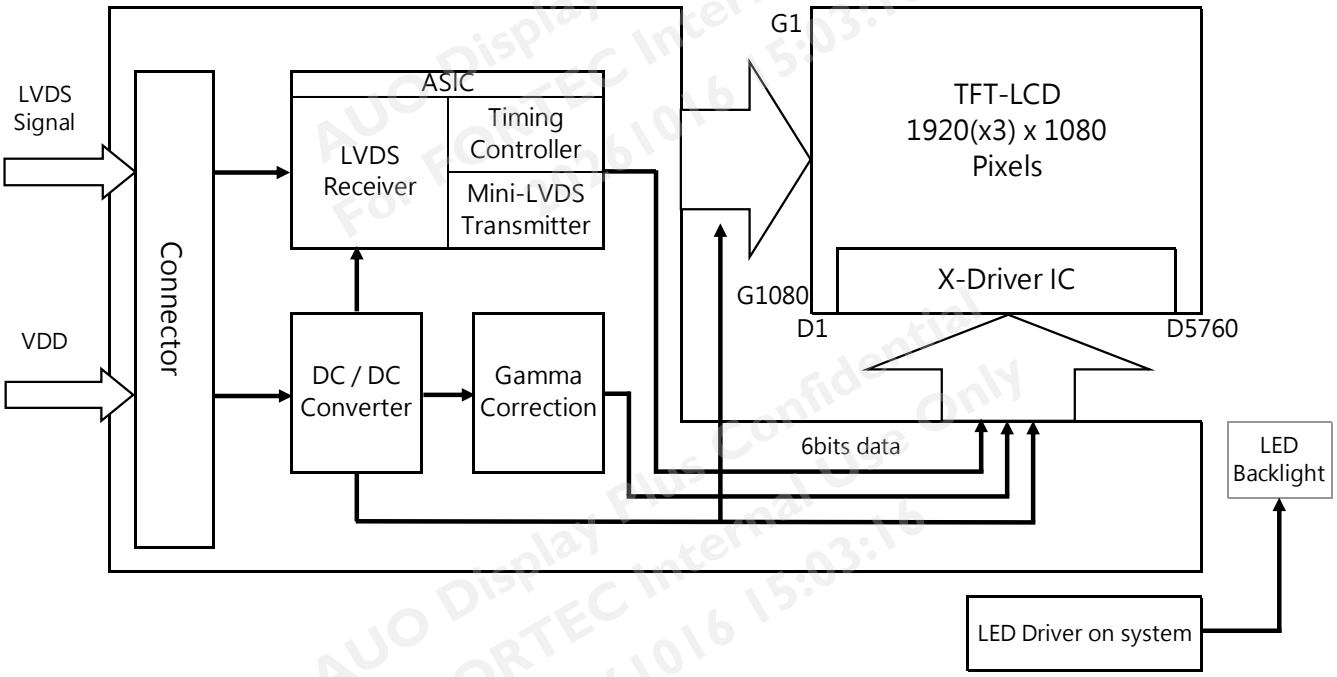

I/F PCB Interface:
Connector: MSBKT2407P30HB
Mating Type:
FI-X30H or FI-X30C2-NPB (Unlocked Type)

© AUO Display Plus Corporation Proprietary

For FORTEC internal use only - provided by ricardobuchanan on 2026/10/16

4.0 Absolute Maximum Ratings

Absolute maximum ratings of the module are as following:

4.1 TFT LCD Module

Item	Symbol	Min	Max	Unit	Conditions
Logic/LCD Drive Voltage	VDD	-0.3	+5.5	[Volt]	***Note 1,2***

4.2 Absolute Ratings of Environment

Item	Symbol	Min.	Max.	Unit	Conditions
Operating Temperature	TOP	-10	60	[°C]	***Note 3 & 4***
Operation Humidity	HOP	5	90	[%RH]	
Storage Temperature	TST	-20	60	[°C]	
Storage Humidity	HST	5	90	[%RH]	

Note 1: With in Ta (25 °C)
Note 2: Permanent damage to the device may occur if exceeding maximum values
Note 3: For quality performance, please refer to AUO IIS (Incoming Inspection Standard).
Note 4: Operation Temperature +60°C is defined as panel surface temperature.

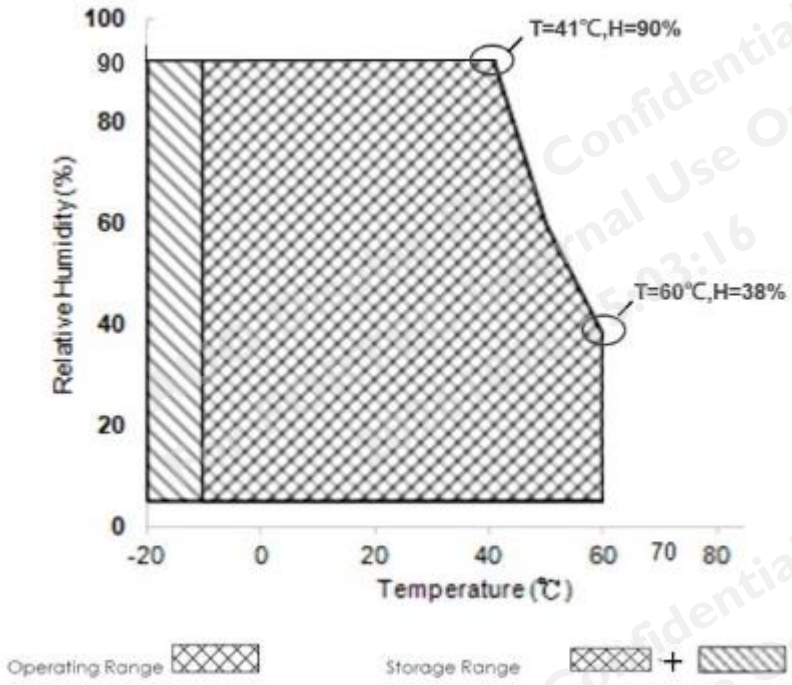

© AUO Display Plus Corporation Proprietary

For FORTEC internal use only - provided by ricardobuchanan on 2026/10/16

5.0 Electrical characteristics

5.1 TFT LCD Module

5.1.1 Power Specification

Input power specifications are as follows:

ut power specifications are as follows:

Symbol	Parameter	Min	Typ	Max	Unit	Conditions
VDD	Logic/LCD Drive Voltage	4.5	5.0	5.5	[Volt]	+/-10%
IDD	Input Current	-	0.46	0.55	[A]	VDD= 5.0V, All White Pattern At 60Hz,
PDD	VDD Power	-	2.3	2.75	[Watt]	VDD= 5.0V, All White Pattern At 60Hz
IRush	Inrush Current	-		3.0	[A]	Note 1
VDDrp	Allowable Logic/LCD Drive Ripple Voltage	-	-	500	[mV] p-p	VDD= 5.0V, All White Pattern At 60Hz

Note 1: Measurement conditions:

The duration of rising time of power input is 470us.

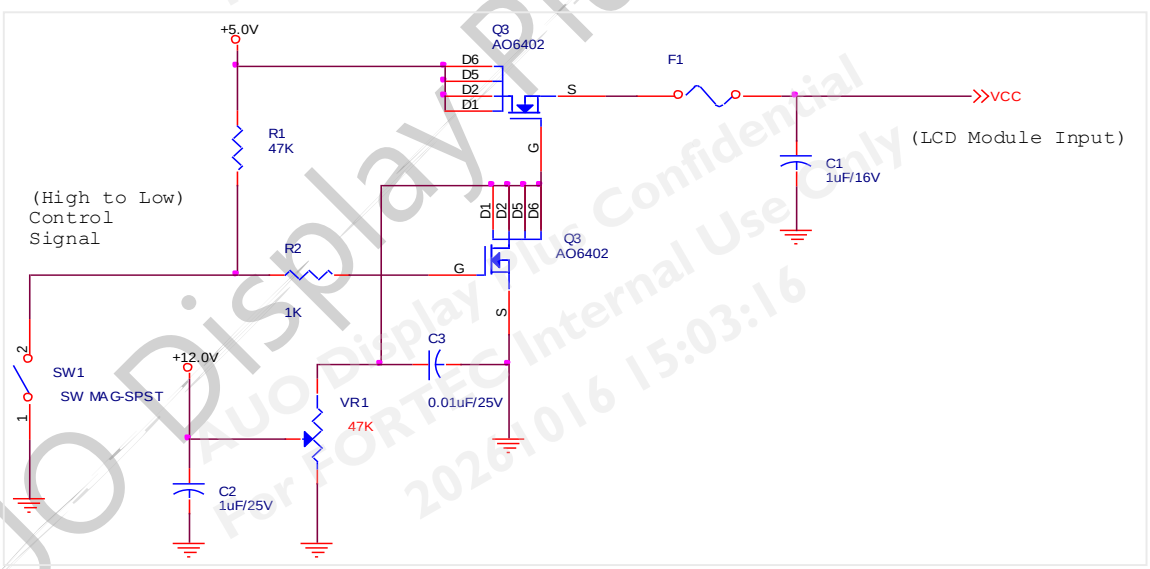

AUO Display Plus Confidential
For FORTEC Internal Use Only
20261016 15:03:16

For FORTEC internal use only - provided by ricardobuchanan on 2026/10/16

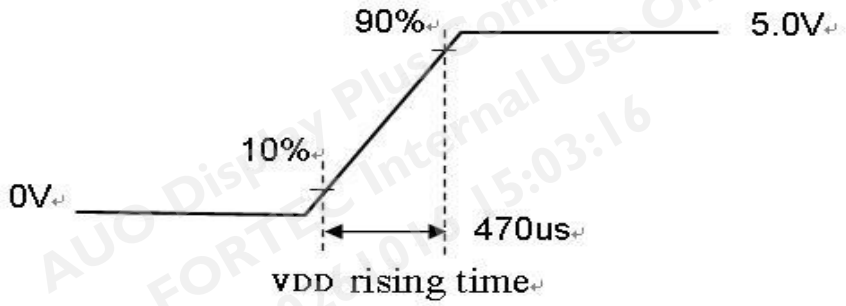

5.1.2 Signal Electrical Characteristics

Input signals shall be low or Hi-Z state when VDD is off. Please refer to specifications of SN75LVDS82DGG (Texas Instruments) in detail.

Characteristics of each signal are as follows:

Symbol	Parameter	Min	Typ	Max	Units	Condition
VTH	Differential Input High Threshold			100	[mV]	VICM = 1.2V ***Note 1***
VTL	Differential Input Low Threshold	-100			[mV]	VICM = 1.2V ***Note 1***
|VID|	Input Differential Voltage	100	400	600	[mV]	***Note 1***
VICM	Differential Input Common Mode Voltage	1.0	1.2	1.5	[V]	VTH-VTL = 200MV (max) ***Note 1***

Note 1: LVDS Signal Waveform

Use RxOCLK- & RxOCLK+ as example.

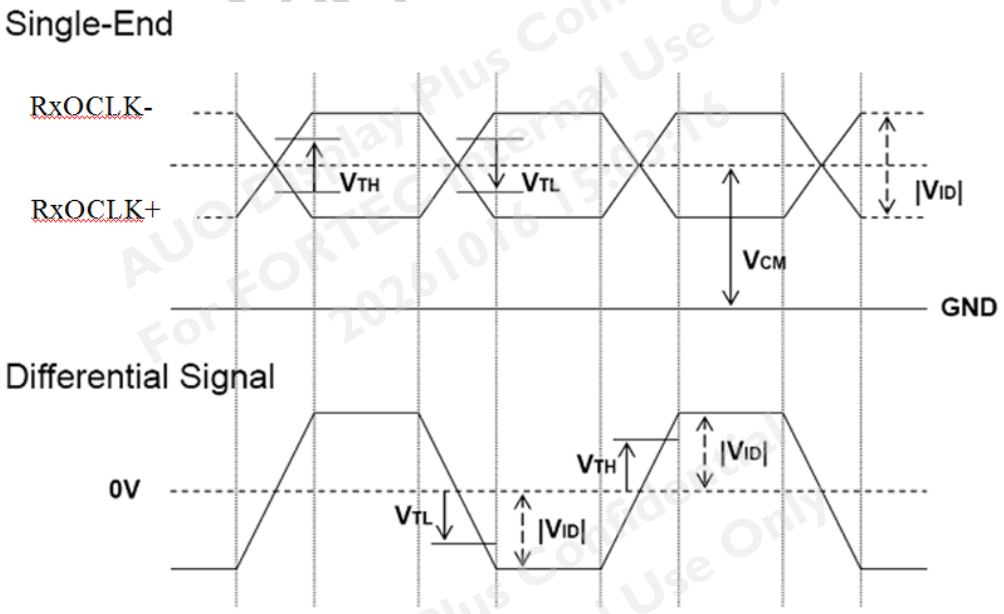

© AUO Display Plus Corporation Proprietary

For FORTEC internal use only - provided by ricardobuchanan on 2026/10/16

5.2 Backlight Unit (OM)

Following characteristics are measured under a stable condition at 25 °C (Room Temperature):

Symbol	Parameter	Min.	Typ.	Max.	Unit	Remark
I_F	LED Supply Current	-	90	-	mA	Ta = 25 °C
V_F	LED Supply Voltage	2.80	3.07	3.20	Volt	I_F = (90)mA, Ta = 25°C
P_{LED}	LED Power Consumption	-	0.277		Watt	I_F = (90) mA, Ta = 25°C
LL	LED Life Time	50,000			Hrs	I_F = (90) mA, Ta= 25°C

Note 1: Ta means ambient temperature of TFT-LCD module.

Note 2: I_F, V_F , P_{LED} are defined for single LED.

Note 3: If G215HAN01.501 module is driven by high current or at high ambient temperature & humidity condition. The operating life will be reduced.

Note 4: Operation life means brightness goes down to 50% initial brightness. Minimum operating life time is estimated data.

Note 5: Each LED light bar consists of 64 pcs LED package (4 strings x 16 pcs / string)

AUO Display Plus Confidential
For FORTEC Internal Use Only
20261016 15:03:16

© AUO Display Plus Corporation Proprietary

For FORTEC internal use only - provided by ricardobuchanan on 2026/10/16

6.0 Signal Characteristic

6.1 Pixel Format Image

Following figure shows the relationship of the input signals and LCD pixel format.

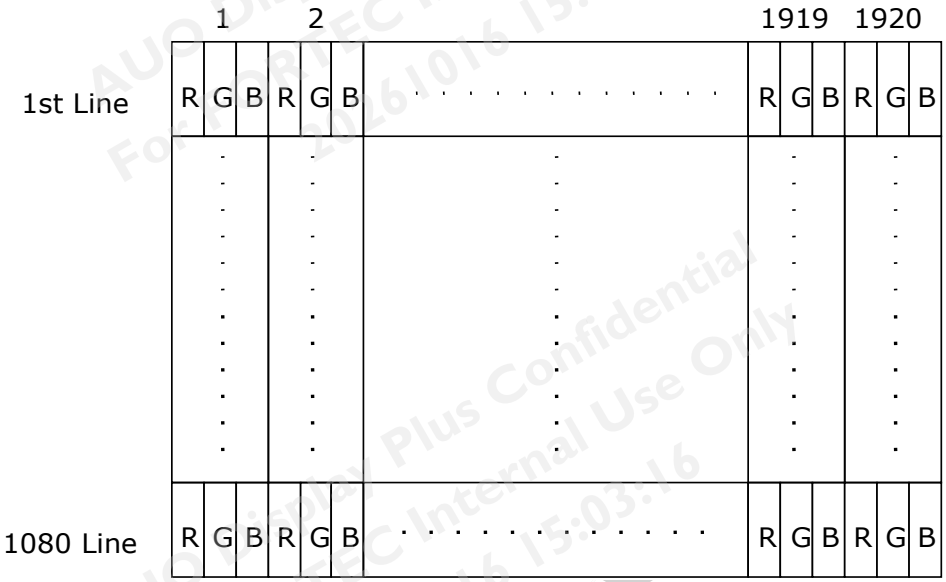

AUO Display Plus Confidential
For FORTEC Internal Use Only
20261016 15:03:16

© AUO Display Plus Corporation Proprietary

For FORTEC internal use only - provided by ricardobuchanan on 2026/10/16

AUO Display+

6.2 The input data format

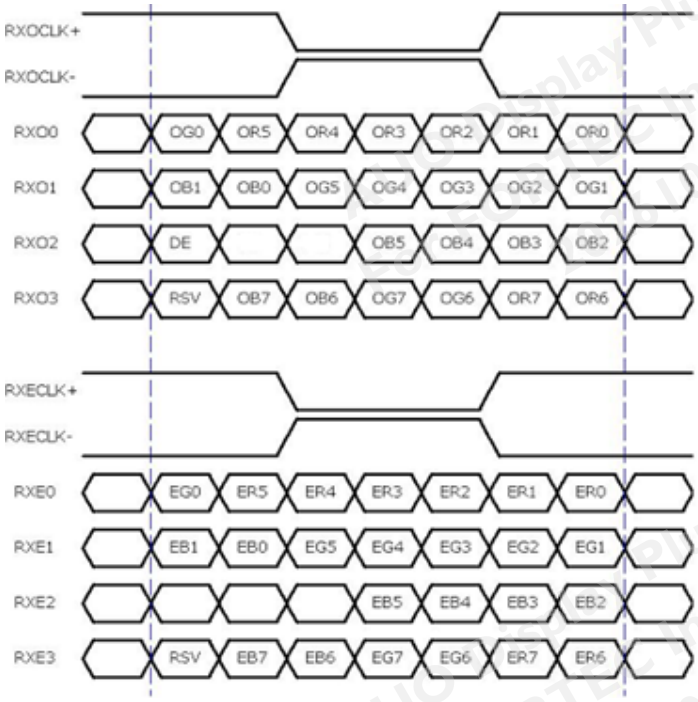

8 Bit Color Bit Order			
MSB	R7	G7	B7
	R6	G6	B6
	R5	G5	B5
	R4	G4	B4
	R3	G3	B3
	R2	G2	B2
	R1	G1	B1
LSB	R0	G0	B0

Note1: Normally DE mode only. VS and HS on EVEN channel are not used.

Note2: Please follow VESA.

Note3: 8-bits signal input.

AUO Display Plus Confidential
For FORTEC Internal Use Only
20261016 15:03:16

© AUO Display Plus Corporation Proprietary

For FORTEC internal use only - provided by ricardobuchanan on 2026/10/16

6.3 Signal Description

The module using a pair of LVDS receiver **SN75LVDS82 / SN75LVDS83** (Texas Instruments) or compatible. LVDS is a differential signal technology for LCD interface and high speed data transfer device. Transmitter shall be SN75LVDS83(negative edge sampling) or compatible**.** The first LVDS port(RxOxxx) transmits odd pixels while the second LVDS port(RxExxx) transmits even pixels.

PIN #	SIGNAL NAME	DESCRIPTION
1	RxO0-	Negative LVDS differential data input (Odd data)
2	RxO0+	Positive LVDS differential data input (Odd data)
3	RxO1-	Negative LVDS differential data input (Odd data)
4	RxO1+	Positive LVDS differential data input (Odd data)
5	RxO2-	Negative LVDS differential data input (Odd data)
6	RxO2+	Positive LVDS differential data input (Odd data)
7	GND	Ground
8	RxOCLK-	Negative LVDS differential clock input (Odd clock)
9	RxOCLK+	Positive LVDS differential clock input (Odd clock)
10	RxO3-	Negative LVDS differential data input (Odd data)
11	RxO3+	Positive LVDS differential data input (Odd data)
12	RxE0-	Negative LVDS differential data input (Even data)
13	RxE0+	Positive LVDS differential data input (Even data)
14	GND	Ground
15	RxE1-	Negative LVDS differential data input (Even data)
16	RxE1+	Positive LVDS differential data input (Even data)
17	GND	Ground
18	RxE2-	Negative LVDS differential data input (Even data)
19	RxE2+	Positive LVDS differential data input (Even data)
20	RxECLK-	Negative LVDS differential clock input (Even clock)
21	RxECLK+	Positive LVDS differential clock input (Even clock)
22	RxE3-	Negative LVDS differential data input (Even data)
23	RxE3+	Positive LVDS differential data input (Even data)
24	GND	Ground
25	NC	No connection (for AUO test only. Do not connect)
26	NC	No connection (for AUO test only. Do not connect)
27	NC	No connection (for AUO test only. Do not connect)
28	VDD	Power Supply Input Voltage
29	VDD	Power Supply Input Voltage
30	VDD	Power Supply Input Voltage

AUO Display Plus Confidential
AUO Display Plus Corporation Confidential
For FORTEC Internal Use Only
2026/10/16 15:03:16

© AUO Display Plus Corporation Proprietary

For FORTEC internal use only - provided by ricardobuchanan on 2026/10/16

Note1: Start from right side

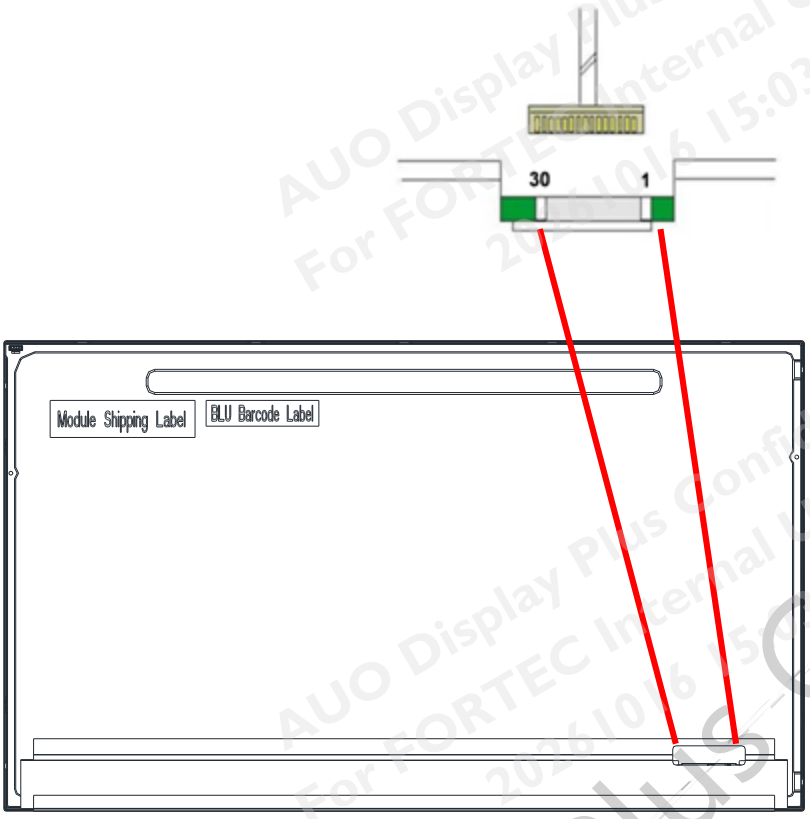

Note2: Input signals of clock shall be the same timing.

Note3: Please follow TV VESA Pin Assignment

AUO Display Plus Confidential
For FORTEC Internal Use Only
20261016 15:03:16

© AUO Display Plus Corporation Proprietary

For FORTEC internal use only - provided by ricardobuchanan on 2026/10/16

6.4 Timing Characteristics

Signal	Item	Symbol	Min	Typ	Max	Unit
V-section	Period	Tv	1094	1130	1836	Th
	Active	Tdisp(v)	1080	1080	1080	Th
	Blanking	Tbp(v)+Tfp(v)+PWvs	14	50	756	Th
H-section	Period	Th	1000	1050	1678	Tclk
	Active	Tdisp(h)	960	960	960	Tclk
	Blanking	Tbp(h)+Tfp(h)+PWhs	40	90	718	Tclk
Clock	Period	Tclk	11.2	14	18.6	ns
	Frequency	Freq.	53.7	71.2	90	MHz
Frame Rate	Frame Rate	1/Tv	49	60	76	Hz

Note 1: Only DE mode operation.
The input of Hsync & Vsync signal does not have an effect upon the LCD normal operation.
Note 2: The performance of the electro-optical characteristics may be influenced by variance of the vertical refresh rates.
Note 3: Horizontal period should be even.

AUO Display Plus Confidential
For FORTEC Internal Use Only
20261016 15:03:16

For FORTEC internal use only - provided by ricardobuchanan on 2026/10/16

AUO Display+

6.5 Timing diagram

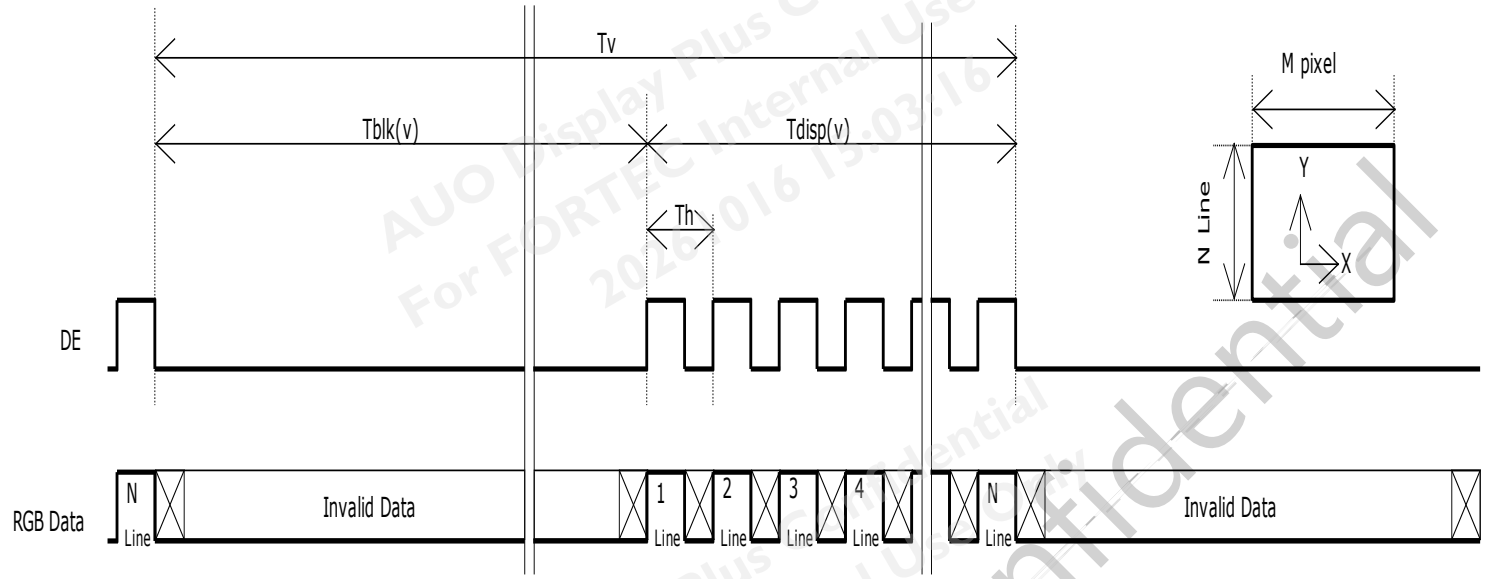

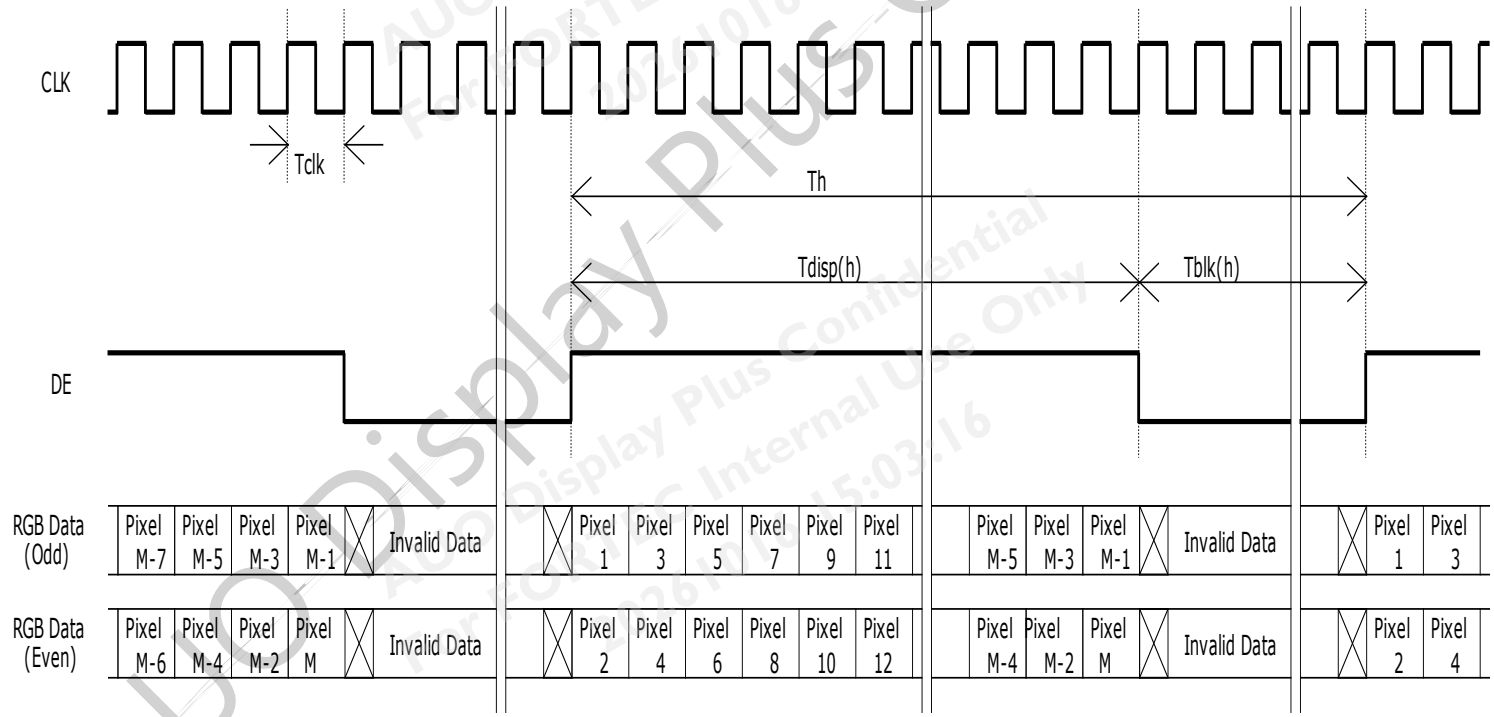

AUO Display Plus Confidential
For FORTEC Internal Use Only
20261016 15:03:16

© AUO Display Plus Corporation Proprietary

For FORTEC internal use only - provided by ricardobuchanan on 2026/10/16

6.6 Power ON/OFF Sequence

VDD power and LED on/off sequence are as follows. Interface signals are also shown in the chart. Signals from any system shall be Hi-Z state or low level when VDD is off.

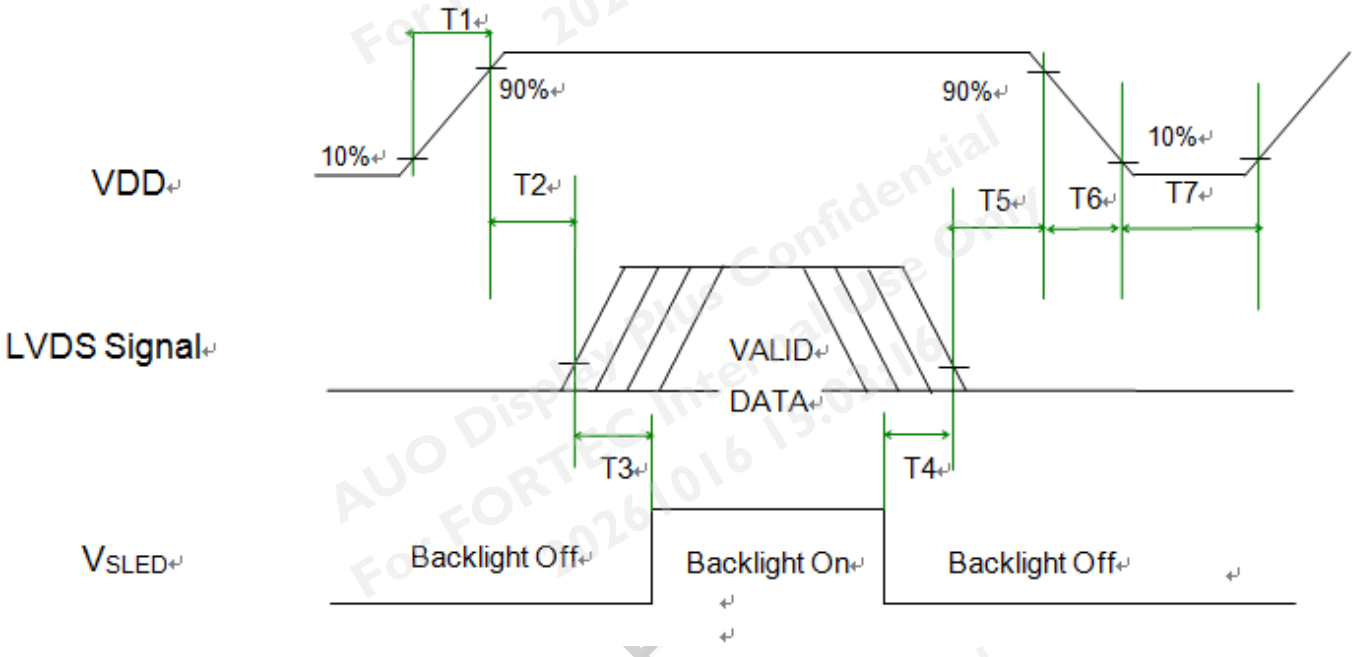

Power ON/OFF sequence timing

Parameter	Value			Units
	Min.	Typ.	Max.	
T1	0.5	-	10	[ms]
T2	0	-	50	[ms]
T3	500	-	-	[ms]
T4	100	-	-	[ms]
T5	0		50	[ms]
T6	0	-	200	[ms]
T7	1000	-	-	[ms]

© AUO Display Plus Corporation Proprietary

For FORTEC internal use only - provided by ricardobuchanan on 2026/10/16

7.0 Connector & Pin Assignment

Physical interface is described as for the connector on module. These connectors are capable of accommodating the following signals and will be following components.

7.1 TFT LCD Module

Connector Name / Designation	Interface Connector / Interface card
Manufacturer	STM
Type Part Number	**MSBKT2407P30HB**
Mating Housing Part Number	FI-X30H or FI-X30C2-NPB (Unlocked Type)

7.1.1 Pin Assignment

Pin#	Signal Name	Pin#	Signal Name
1	RxOIN0-	2	RxOIN0+
3	RxOIN1-	4	RxOIN1+
5	RxOIN2-	6	RxOIN2+
7	GND	8	RxOCLKIN-
9	RxOCLKIN+	10	RxOIN3-
11	RxOIN3+	12	RxEIN0-
13	RxEIN0+	14	GND
15	RxEIN1-	16	RxEIN1+
17	GND	18	RxEIN2-
19	RxEIN2+	20	RxECLKIN-
21	RxECLKIN+	22	RxEIN3-
23	RxEIN3+	24	GND
25	Aging	26	SCL For PVCOM
27	SDA For PVCOM	28	VDD
29	VDD	30	VDD

AUO Display Plus Confidential
For FORTEC Internal Use Only
20261016 15:03:16

For FORTEC internal use only - provided by ricardobuchanan on 2026/10/16

7.2 LED Backlight Unit: LED Connector

Connector Name / Designation	LED Connector
Manufacturer	CviLux or Compatible
Connector Model Number	CI1406M1HRN-NH1 or Compatible
Mating Connector Model Number	H112K-P06N-00B (Non-Locking type) or Compatible H112K-P06N-13B (Locking type) or Compatible

7.3 LED Connector Pin Assignment

Pin#	Symbol	Description
1	Ch1	LED Current Feedback Terminal (Channel 1)
2	Ch2	LED Current Feedback Terminal (Channel 2)
3	V_{SLED}	LED Power Supply Voltage Input Terminal
4	V_{SLED}	LED Power Supply Voltage Input Terminal
5	Ch3	LED Current Feedback Terminal (Channel 3)
6	Ch4	LED Current Feedback Terminal (Channel 4)

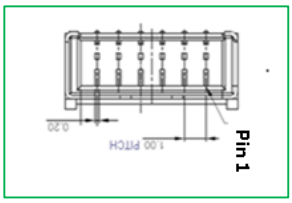

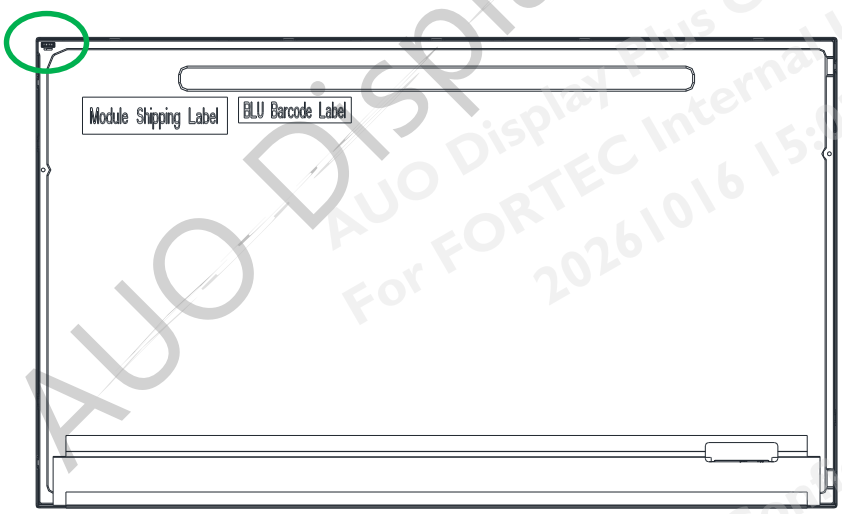

© AUO Display Plus Corporation Proprietary

For FORTEC internal use only - provided by ricardobuchanan on 2026/10/16

8.0 Reliability Test

Environment test conditions are listed as following table.

Items	Required Condition	Note
Temperature Humidity Bias (THB)	Ta= 50°C, 80%RH, 300hours	
High Temperature Operation (HTO)	Ta= 60°C, 300hours	
Low Temperature Operation (LTO)	Ta= -10°C, 300hours	
High Temperature Storage (HTS)	Ta= 60°C, 300hours	
Low Temperature Storage (LTS)	Ta= -20°C, 300hours	
Vibration Test (Non-operation)	Acceleration: 1.5 Grms Wave: Random Frequency: 10 - 200 Hz Sweep: 30 Minutes each Axis (X, Y, Z)	
Shock Test (Non-operation)	Acceleration: 50 G Wave: Half-sine Active Time: 20 ms Direction: ±X, ±Y, ±Z (one time for each Axis)	
Thermal Shock Test (TST)	-20°C /30min, 60°C /30min, 100 cycles	***1***
On/Off Test	On/10sec, Off/10sec, 30,000 cycles	
ESD (Electro Static Discharge)	Contact Discharge: ± 8KV, 150pF(330Ω) 1sec, 8 points, 25 times/ point.	***2***
	Air Discharge: ± 15KV, 150pF(330Ω) 1sec 8 points, 25 times/ point.	
Altitude Test	Operation:10,000 ft Non-Operation:30,000 ft	

Note 1: The TFT-LCD module will not sustain damage after being subjected to 100 cycles of rapid temperature change. A cycle of rapid temperature change consists of varying the temperature from -20°C to 60°C, and back again. Power is not applied during the test. After temperature cycling, the unit is placed in normal room ambient for at least 4 hours before power on.

Note 2: According to EN61000-4-2 , ESD class B: Some performance degradation allowed. No data lost. Self-recoverable. No hardware failures.

Note 3 : Mura shall be ignored after high temperature reliability test.

© AUO Display Plus Corporation Proprietary

AUO Display Plus Confidential
For FORTEC Internal Use Only
20261016 15:03:16
For FORTEC internal use only - provided by ricardobuchanan on 2026/10/16

9.0 Shipping Label & Packaging

9.1 Shipping Label (on the rear side of TFT-LCD display)

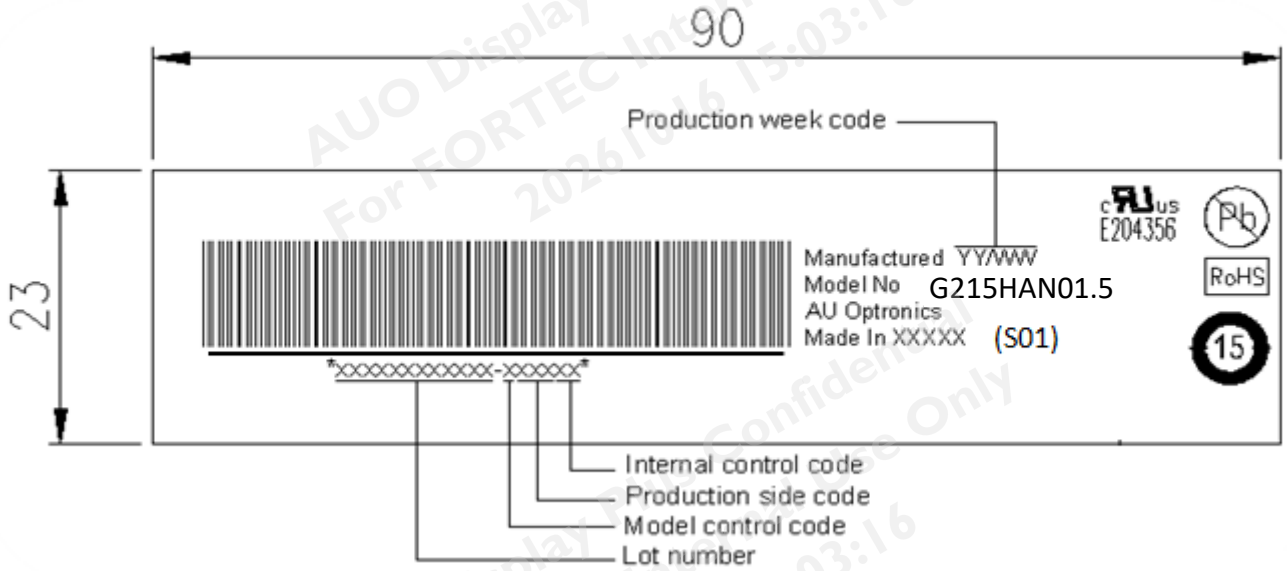

Note 1: For Pb Free products, AUO will add for identification.

Note 2: For RoHS compatible products, AUO will add for identification.

Note 3: For China RoHS compatible products, AUO will add for identification.

Note 4: The Green Mark will be presented only when the green documents have been ready by AUO Internal Green Team.

9.2 Packaging

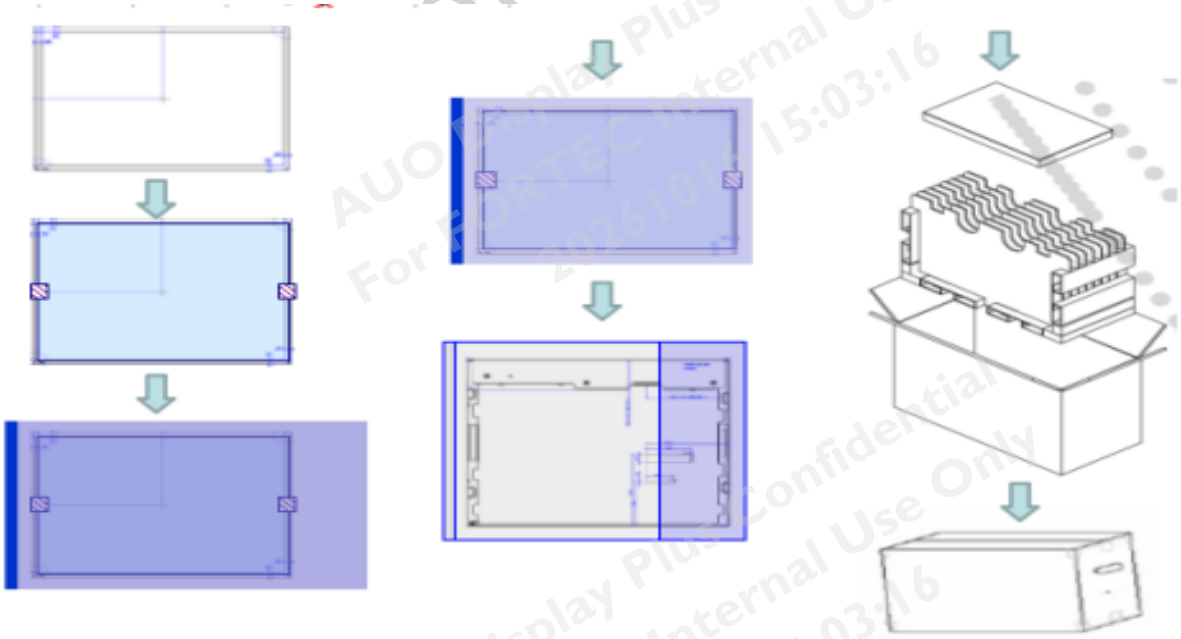

© AUO Display Plus Corporation Proprietary

For FORTEC internal use only - provided by ricardobuchanan on 2026/10/16

Max capacity：8 TFT-LCD module per carton

Max weight: 16.0 kg per carton

Outside dimension of carton: : 601mm*261mm*412mm

Pallet size： 1180mm*1050mm*132mm

9.3 Palletizing

Box stacked

Module by air：(2 *4) *3 layers，one pallet put 24 boxes，total 192pcs module

Module by sea：Double pallet (2 *4) *3 layers + (2*4) * 1 layer，total 320 pcs module

Module by sea_ HQ : Double pallet (2 *4) *3 layers + (2*4) * 2 layers，total 320 pcs module

AUO Display Plus Confidential
For FORTEC Internal Use Only
20261016 15:03:16

© AUO Display Plus Corporation Proprietary

For FORTEC internal use only - provided by ricardobuchanan on 2026/10/16

10.0 Mechanical Characteristics

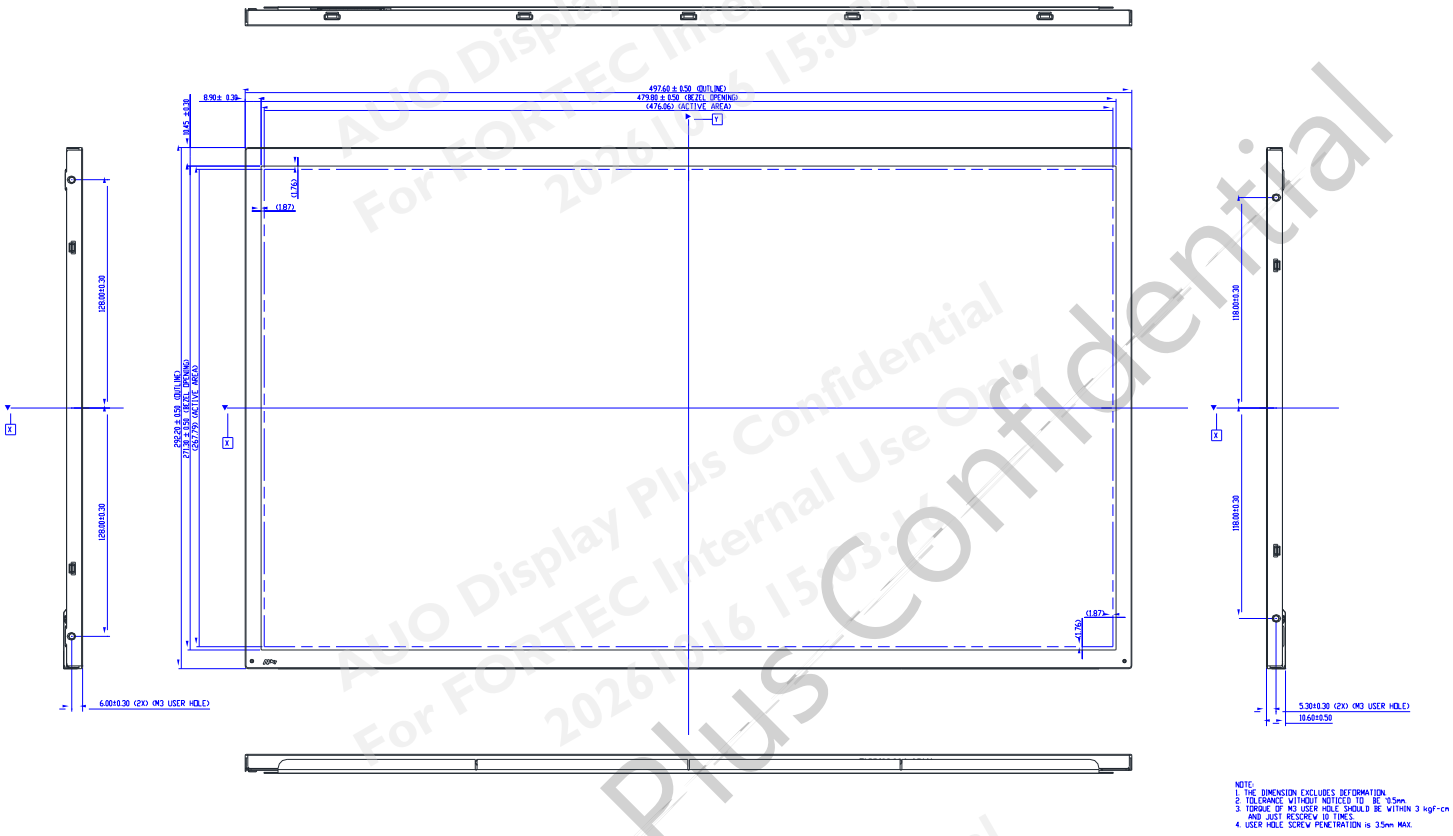

AUO Display Plus Confidential
For FORTEC Internal Use Only
20261016 15:03:16

© AUO Display Plus Corporation Proprietary

For FORTEC internal use only - provided by ricardobuchanan on 2026/10/16

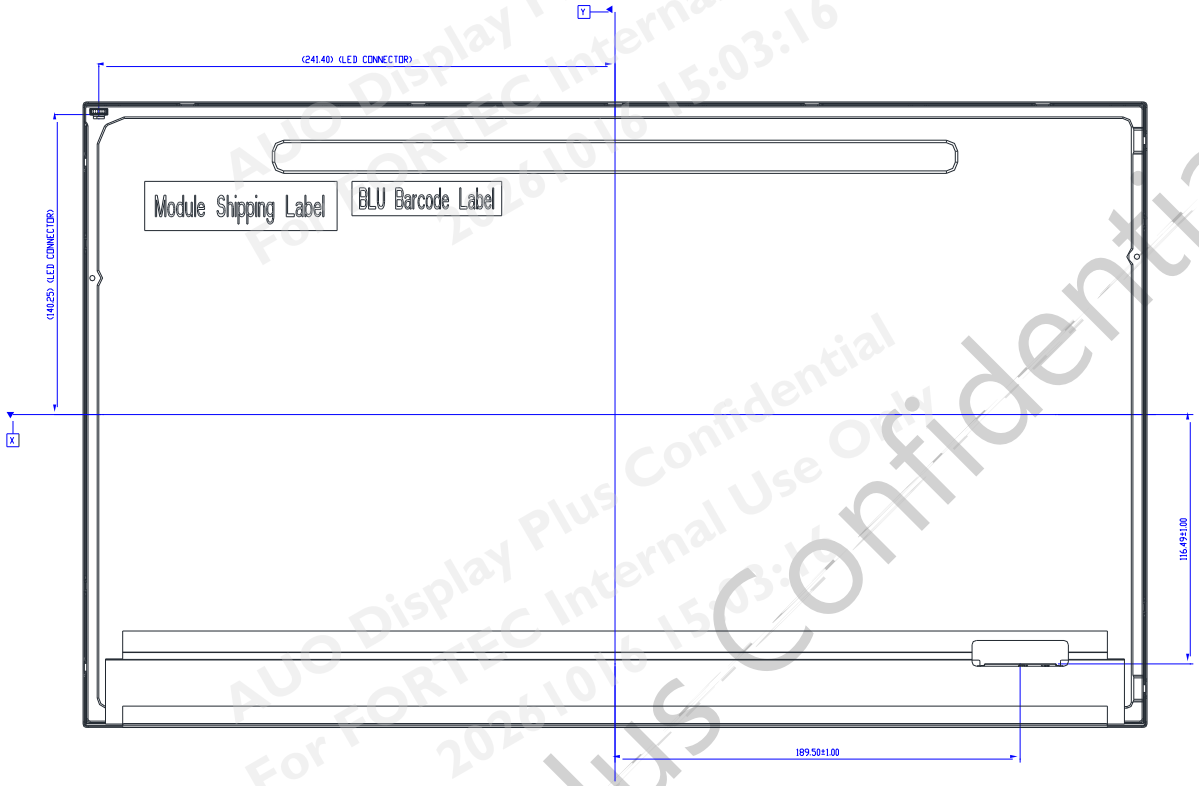

AUO Display Plus Confidential
For FORTEC Internal Use Only
20261016 15:03:16

© AUO Display Plus Corporation Proprietary

For FORTEC internal use only - provided by ricardobuchanan on 2026/10/16

11 Safety

11.1 Sharp Edge Requirements

There will be no sharp edges or comers on the display assembly that could cause injury.

11.2 Materials

11.2.1 Toxicity

There will be no carcinogenic materials used anywhere in the display module. If toxic materials are used, they will be reviewed and approved by the responsible AUO toxicologist.

11.2.2 Flammability

All components including electrical components that do not meet the flammability grade UL94-V1 in the module will complete the flammability rating exception approval process.

The printed circuit board will be made from material rated 94-V1 or better. The actual UL flammability rating will be printed on the printed circuit board.

11.3 Capacitors

If any polarized capacitors are used in the display assembly, provisions will be made to keep them from being inserted backwards.

11.4 National Test Lab Requirement

The display module will satisfy all requirements for compliance to:

UL 60950-1, Second Edition	U.S.A. Information Technology Equipment

AUO Display Plus Confidential
For FORTEC Internal Use Only
20261016 15:03:16

© AUO Display Plus Corporation Proprietary

For FORTEC internal use only - provided by ricardobuchanan on 2026/10/16

FORTEC
GROUP

Our company network supports you worldwide with offices in Germany, Austria, Switzerland, Benelux, Egypt, the UK and the USA. For more information please contact:

FORTEC
GROUP

FORTEC Elektronik AG | Augsburger Straße 2b | 82110 Germering
+49 89 894450-0
info@fortecag.de | www.fortecag.de

FORTEC
INTEGRATED

FORTEC Integrated GmbH | Augsburger Straße 2b | 82110 Germering
+49 89 894363-0
info@fortec-integrated.de | www.fortec-integrated.de

FORTEC
POWER

FORTEC Power GmbH | Lise-Meitner-Straße 3 | 64560 Riedstadt
+49 6158 8285-0
weborder@fortec-power.de | www.fortec-power.de

FORTEC
UNITED KINGDOM

FORTEC Technology UK Ltd. | Osprey House | 1 Osprey Court
Hinchingbrooke Business Park | Huntingdon | Cambridgeshire | PE29 6FN
+44 1480 411600 | info@fortec.uk | www.fortec.uk

FORTEC
UNITED STATES

FORTEC United States, Corp. | 87 Raynor Avenue Unit 1 | Ronkonkoma
NY | 11779 | +1 631 5804360
info@fortec.us | www.fortec.us

FORTEC
CZECH REPUBLIC

FORTEC Czech Republic s.r.o. | Přátelství 275 | 330 02 Dýšina
+49 89 894363-0
info@fortec.cz | www.fortec.cz

FORTEC
SWITZERLAND

FORTEC Switzerland AG | Bahnhofstraße 3 | 5436 Würenlos
+41 44 7446111
info@fortec.ch | www.fortec.ch

FORTEC
EGYPT

FORTEC Electronic Design and Solution Egypt SMLC | Linx Business Park
Unit B318 | Smart Village | Giza Governorate
+20 120 1146222 | info@fortec.eg | www.fortec.eg

FORTEC
BENELUX

FORTEC Benelux B.V. | Everdenberg 79 | 4902 TT Oosterhout
+31 162 515458
info@fortec-benelux.com | www.fortec-benelux.com