FORTEC GROUP

Datasheet

Ampire

AM-800480NGTZQW-01H

AM-10-011

FORTEC UNITED STATES

FORTEC INTEGRATED

FORTEC UNITED KINGDOM

The information contained in this document has been carefully researched and is, to the best of our knowledge, accurate. However, we assume no liability for any product failures or damages, immediate or consequential, resulting from the use of the information provided herein. Our products are not intended for use in systems in which failures of product could result in personal injury. All trademarks mentioned herein are property of their respective owners. All specifications are subject to change without notice.

晶采光電科技股份有限公司
AMPIRE CO., LTD.

Specifications for LCD module

Customer	
Customer part no.	
Ampire part no.	AM-800480NGTZQW-01H
Approved by	
Date	

☐ Preliminary Specification
■ Formal Specification

AMPIRE CO., LTD.
4F., No.116, Sec. 1, Xintai 5th Rd., Xizhi Dist., New Taipei City221, Taiwan (R.O.C.)
新北市汐止區新台五路一段 **116** 號 **4** 樓(東方科學園區 **A** 棟)
TEL:886-2-26967269 , FAX:886-2-26967196 or 26967270

Approved by	Checked by	Organized by
Patrick	Simon	Jessica

This Specification is subject to change without notice.

RECORD OF REVISION

Revision Date	Page	Contents	Editor
2021/07/19	--	New Release	Jessica
2025/07/08	15	Update Interface Timing	Jessica

1. Features

5 inch Amorphous-TFT-LCD (Thin Film Transistor Liquid Crystal Display) module. This TFT LCD has a 5.0 (5:3) inch diagonally measured active display area with 800x480 (800 horizontal by 480 vertical pixels) resolution. This module is composed of a 5” TFT-LCD panel and backlight unit.

(1) Construction: a-Si TFT-LCD with driving system, White LED Backlight.

(2) LCD type : IPS

(3) Number of the Colors : 16.7M colors (R,G,B 8bit digital each)

(4) Interface: 24 Bit TTL RGB interfaces. 45 pin.

(5) LCD Power Supply Voltage: 3.3V single power input, built-in power supply circuit.

2. Physical Specifications

Item	Specifications	unit
Display size (diagonal)	5.0	inch
Resolution	800 (W) x RGB x 480 (H)	dot
Pixel pitch	0.135 (W) x 0.135 (H)	mm
Color configuration	R.G.B Vertical stripe	
Display Mode	Normally Black	

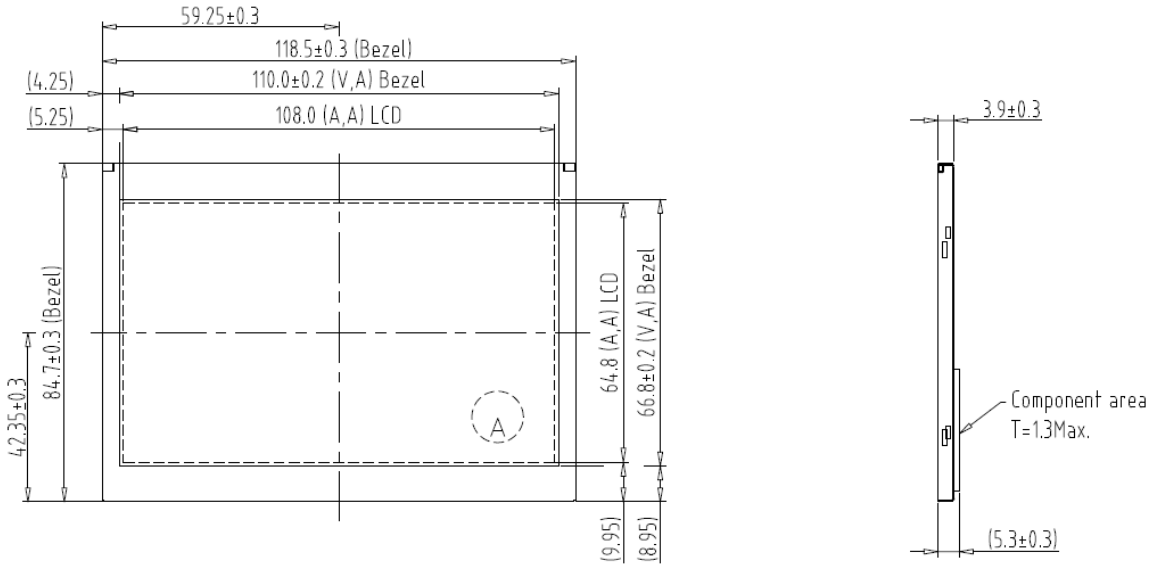

3. Absolute Maximum Ratings

3.1 Electrical Absolute max. ratings

Item	Symbol	Condition	Min.	Max.	Unit	Remark
Power voltage	VCC	GND=0	-0.3	4.0	V	
Logic Input Voltage Range	VIN	GND=0	-0.3	VCC +0.3	V	Note(1)

Note(1) HD, VD, DENA, DCLK, R0~R7, G0~G7, B0~B7.

Note(2) The following are maximum values which, if exceeded, may cause operation or damage to the unit.

3.2 Environmental Absolute Maximum Ratings

Item	Operating		Storage		Remark
	Min.	Max.	Min.	Max.	
Temperature	-30	85	-30	85	Note(2),(3) ,(4),(5),(6),(7)
Humidity	Note(1)		Note(1)		
Corrosive Gas	Not Acceptable		Not Acceptable		

Note(1) Ambient temperature Temp. <= 60℃ : 90% RH max

Note(2) For storage condition Ta at -30℃ < 240h , at 85℃ < 240h

Note(3) For operating condition Ta at -30℃ < 100h , at 85℃ < 240h

Note(4) Background color changes slightly depending on ambient temperature. This phenomenon is reversible.

Note(5) The response time will be slower at low temperature.

Note(6) Only operation is guaranteed at operating temperature. Contrast, response time, another display quality are evaluated at +25℃

Note(7) When LCM panel is operated over 60℃ (center of the panel surface temperature), the IAK of the LED back-light should be adjusted to 10mA(one channel)

Note(8) This is center of the panel surface temperature, not ambient temperature.

Note(9) At 25℃

4. Optical Characteristics

Item		Symbol	Condition	Min.	Typ.	Max.	Unit	Note
Viewing Angle	Hor.	θ U	CR≧10	75	85	--	deg.	(1),(4)
		θ D		75	85	--		
	Ver.	θ L		75	85	--		
		θ R		75	85	--		
Contrast ratio		CR	Θ=Φ=0°	800	1000	--	--	(1),(2)
Response Time		$T_R + T_F$	Θ=Φ=0°	--	30	40	msec	(1),(3)
Color Gamut		(%)		45	50	--	%	
Color chromaticity	Red	Rx	Θ=Φ=0°	Typ. -0.05	TBD	Typ. +0.05	--	(1),(4),(5)
		Ry			TBD			
	Green	Gx			TBD			
		Gy			TBD			
	Blue	Bx			TBD			
		By			TBD			
	White	Wx			**0.32**			
		Wy			**0.37**			
Luminance (IAK=200mA)		L	Θ=Φ=0°	**720**	**900**	--	cd/m²	(1),(6)
Luminance Uniformity		ΔL	Θ=Φ=0°	70	-	-	%	(7)

Measuring Condition

Ta=25°C. To be measured on the center area of panel after 10 minutes operation. LED Back-light IAK=15mA (one channel).

- Measuring surrounding：Dark room
- Ambient temperature：25±2℃
- 15min. Warm-up time.

Note(1) Definition of Viewing Angle

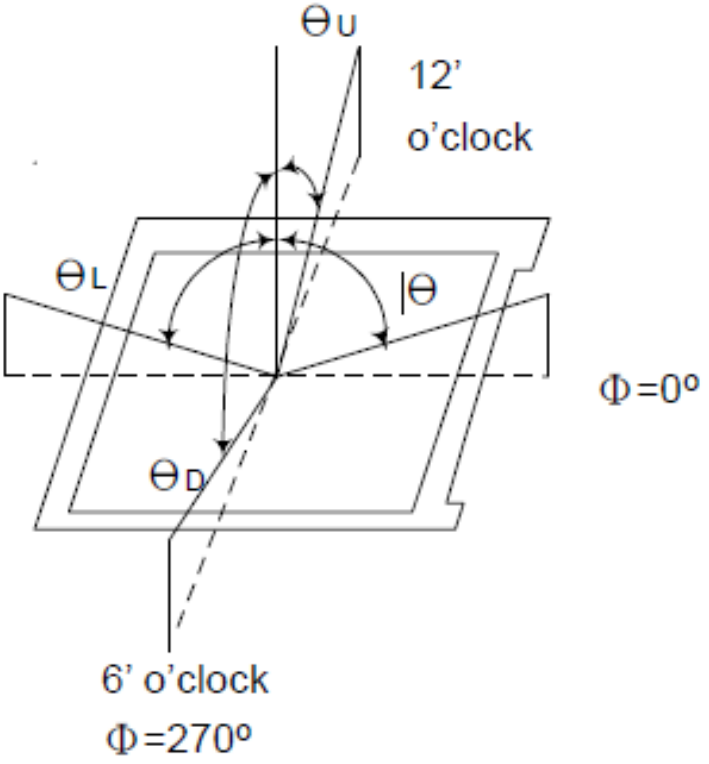

Note(2) Definition of Contrast Ratio (CR) :

Contrast ratio is calculated with the following formula.

$$\text{Contrast ratio (CR)} = \frac{\text{Photo detector output when LCD is at “White” state}}{\text{Photo detector Output when LCD is at “Black” state}}$$

Note(3) Definition of Response Time : Sum of TR and TF

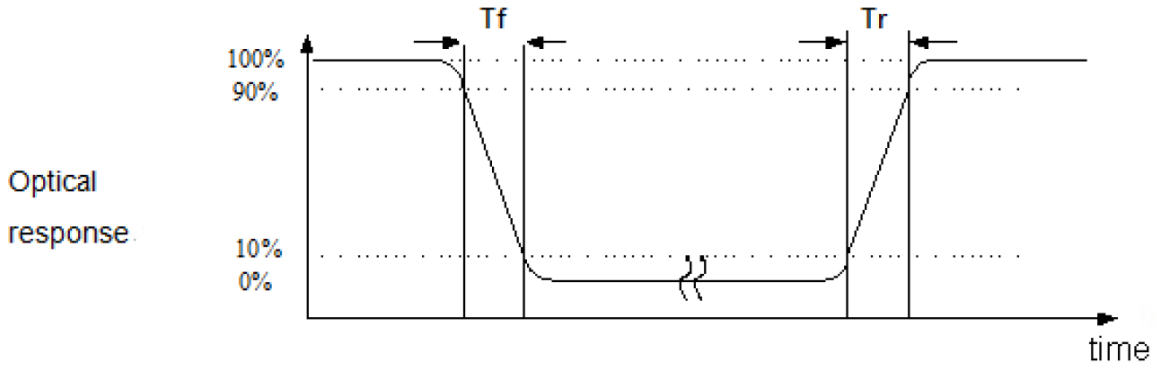

Note(4) Definition of optical measurement setup

The optical characteristics should be measured in dark room. After 30 minutes operation, the optical properties are measured at the center point of the LCD screen. (Response time is measured by Photo detector TOPCON BM-7, other items are measured by BM-5A/Field of view: 1° / Height: 500mm.)

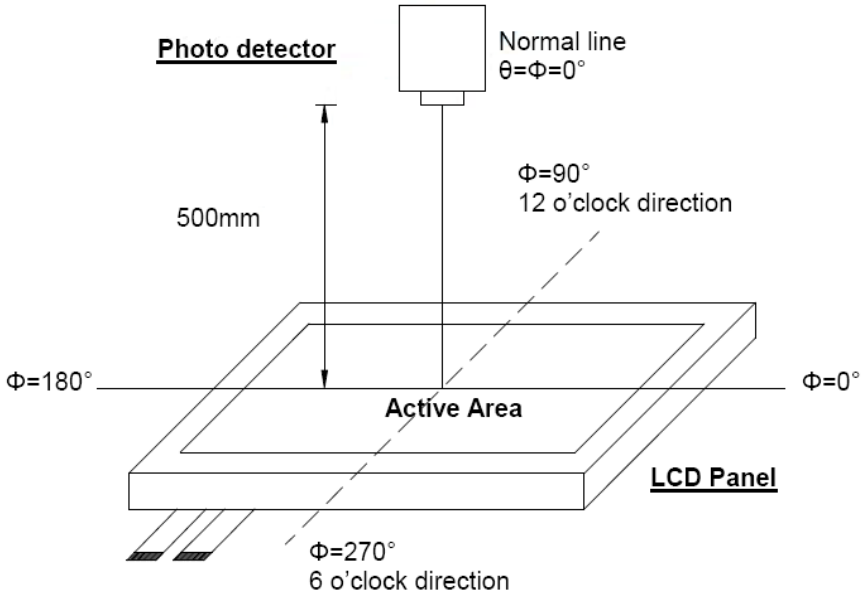

Note(5) Definition of color chromaticity (CIE1931)

Color coordinated measured at center point of LCD.

All input terminals LCD panel must be ground when measuring the center area of the panel.

Note(6) Luminance is measured at point 5 of the display.

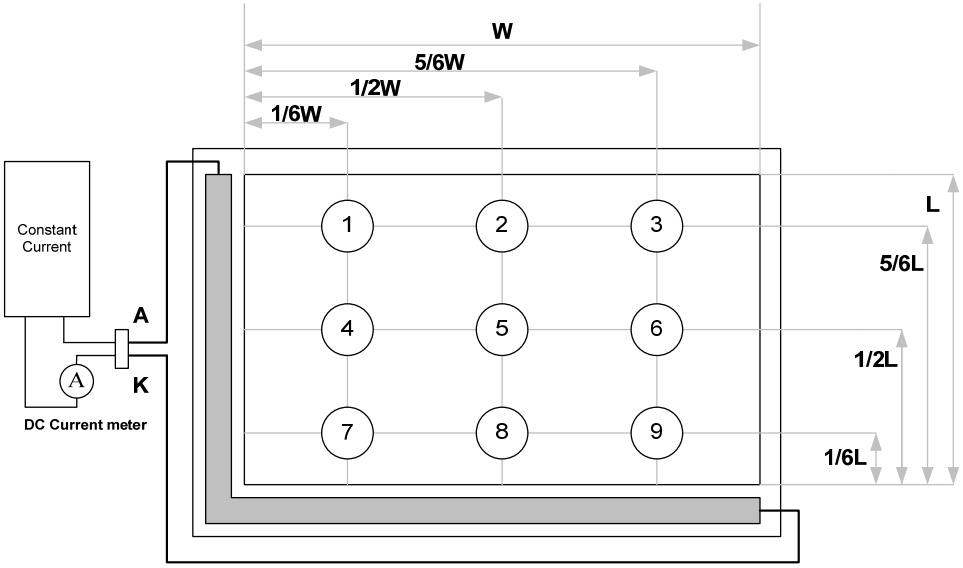

Note(7) Definition of Luminance Uniformity

Active area is divided into 9 measuring areas (Refer to bellow figure).
Every measuring point is placed at the center of each measuring area.

$$\text{Luminance Uniformity (Yu)} = \frac{B_{min}}{B_{max}}$$

L ----- Active area length W ----- Active area width

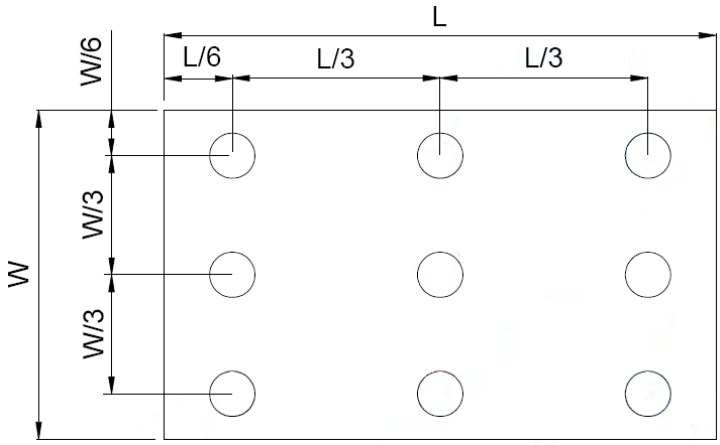

Bmax: The measured maximum luminance of all measurement position.
Bmin: The measured minimum luminance of all measurement position.

5. Electrical Characteristics

5.1 DC Characteristics

Item		Symbol	Min.	Typ.	Max.	Unit	Note
Power supply voltage		VCC	3.3	--	3.6	V	
Input voltage for logic	H Level	V_{IH}	0.7* VCC	--	VCC	V	(1)
	L Level	V_{IL}	GND	--	0.3* VCC	V	
Power Supply current		ICC	--	**70**	--	mA	(2)

Note(1) HD, VD, DENA, DCLK, and R0~R7, G0~G7, B0~B7, DISP.

Note(2) fV =60Hz , Ta=25℃ , Display pattern : All White.

Note(3) *:Will be reference only

5.2 Electrical Characteristic Of LED Backlight

Item	Symbol	Min.	Typ.	Max.	Unit	Note
LED Forward Voltage	VAK	--	24.0	27.6	V	IAK=15mA, Ta=25℃
LED Forward Current	IAK	--	15	20	mA	Ta=25℃ (per string)
LED life time			50k	-	Hrs.	IAK=15mA, Ta=25℃

Note(1) Ta means ambient temperature of TFT-LCD module.

Note(2) If the module is driven by high current or at high ambient temperature & humidity condition. The operating life will be reduced.

Note(3) The constant current source is needed for LED back-light driving.

Note(4) Operating life means brightness goes down to 50% minimum brightness. LED life time is estimated data. Ta=25℃

Note(5) The structure of LED B/L shows as below.
(LED :8 string and 1 parallel per channel)

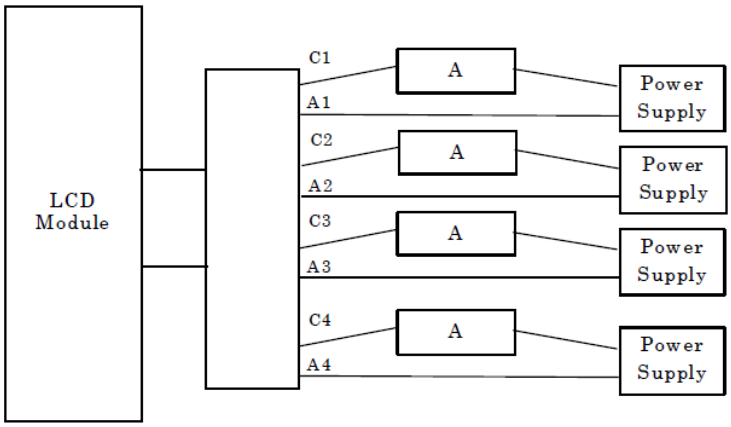

Note(6) When LCM is operated over 60℃ ambient temperature, the IAK of the LED backlight should be adjusted to 10mA max

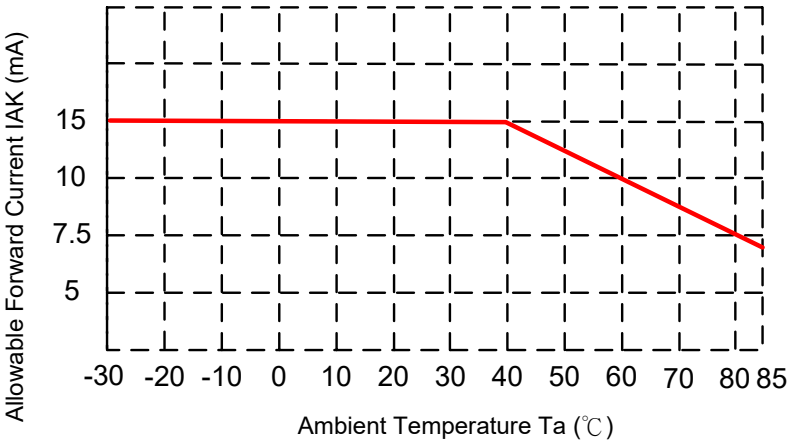

6. Interface Pin Assignment

Pin No	Symbol	Function
1	GND	Power Ground
2	GND	Power Ground
3	VCC	3.3V Power Supply for LCD
4	VCC	3.3V Power Supply for LCD
5	R0	Red Data 0 (LSB)
6	R1	Red Data 1
7	R2	Red Data 2
8	R3	Red Data 3
9	R4	Red Data 4
10	R5	Red Data 5
11	R6	Red Data 6
12	R7	Red Data 7 (MSB)
13	G0	Green Data 0 (LSB)
14	G1	Green Data 1
15	G2	Green Data 2
16	G3	Green Data 3
17	G4	Green Data 4
18	G5	Green Data 5
19	G6	Green Data 6
20	G7	Green Data 7 (MSB)
21	B0	Blue Data 0 (LSB)
22	B1	Blue Data 1
23	B2	Blue Data 2
24	B3	Blue Data 3
25	B4	Blue Data 4
26	B5	Blue Data 5
27	B6	Blue Data 6
28	B7	Blue Data 7(MSB)
29	GND	Power Ground
30	DCLK	Clock Signals
31	DISP	Display on/off (High: on, Low :off)

32	HD	Horizontal SYNC signal.
33	VD	Vertical SYNC signal
34	DENA	Data Enable signal (to settle the viewing area)
35	CMMD	No Connect
36	SC	Scan direction(Low:normal,High:reverse)
37	GND	Power Ground
38	LED_C1	LED cathode1
39	LED_A1	LED anode1
40	LED_C2	LED cathode2
41	LED_A2	LED anode2
42	LED_C3	LED cathode3
43	LED_A3	LED anode3
44	LED_C4	LED cathode4
45	LED_A4	LED anode4

7. Interface Timing

Timing for RGB Interface

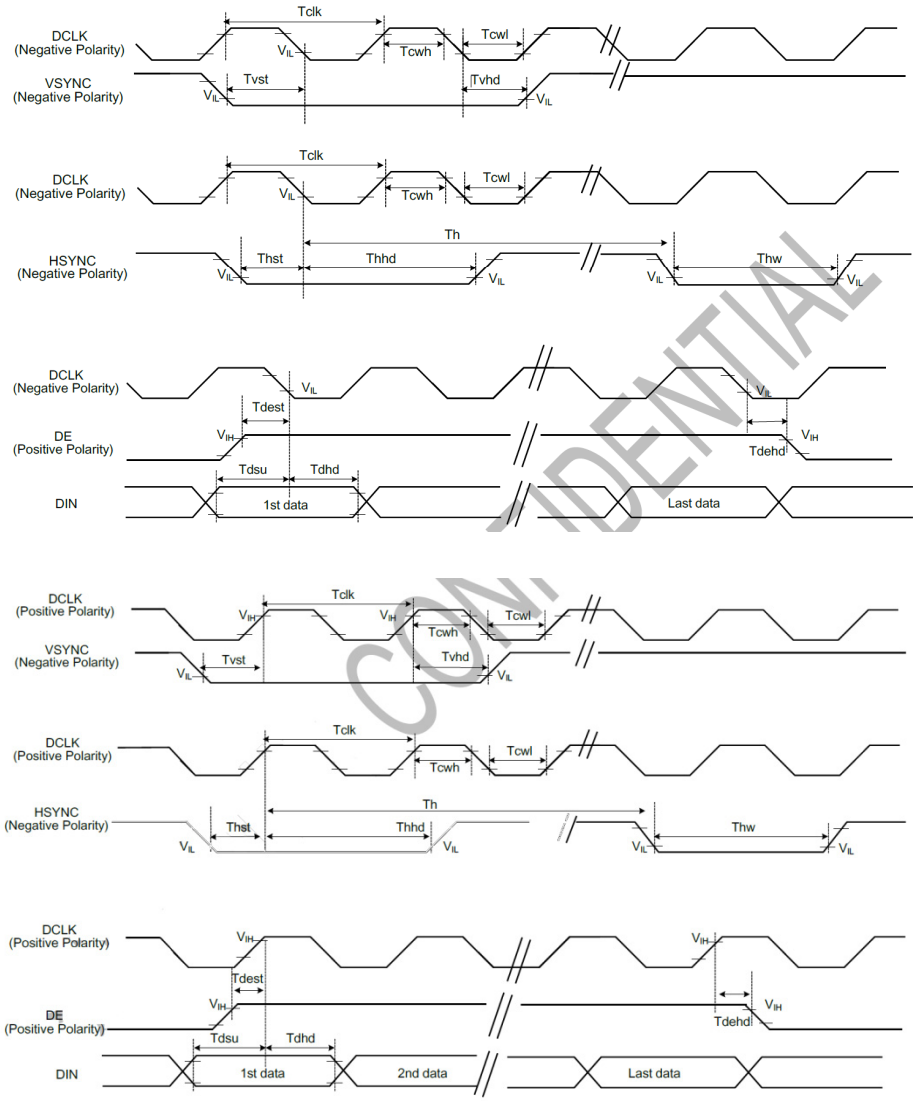

Item	Symbol	Min.	Typ.	Max.	Unit	Conditions
CLK Pulse Duty	Tcw	40	50	60	%	
HSYNC Width	Thw	2	-	-	DCLK	
HSYNC Period	Th	55	60	65	us	
VSYNC Setup Time	Tvst	12	-	-	ns	
VSYNC Hold Time	Tvhd	12	-	-	ns	
HSYNC Setup Time	Thst	12	-	-	ns	
HSYNC Hold Time	Thhd	12	-	-	ns	
Data Setup Time	Tdsu	12	-	-	ns	
Data Hold Time	Tdhd	12	-	-	ns	
DE Setup Time	Tdest	12	-	-	ns	
DE Hold Time	Tdehd	12	-	-	ns	

CONFIDENTIAL

Interface Control Pins		
VDPOL	I	VDPOL sets VSYNC polarity in RGB interface and sets LVDS 3- / 4- lane in LVDS interface. MCU Type / VDPOL / Function Description RGB interface: L — VSYNC polarity: positive RGB interface: H — VSYNC polarity: negative(Default) LVDS interface: L — LVDS 3 lane LVDS interface: H — LVDS 4 lane(Default)
HDPOL	I	HDPOL sets HSYNC polarity in RGB interface. HDPOL / Function Description L — HSYNC polarity: positive H — HSYNC polarity: negative(Default) HDPOL pin should be connected to "H" when it is used in LVDS interface.
DCLKPOL	I	DCLKPOL sets DCLK polarity in RGB interface. DCLKPOL / Function Description L — DCLK polarity: positive H — DCLK polarity: negative(Default) DCLKPOL pin should be connected to "H" when it is used in LVDS interface.

Parallel 24-bit RGB Input Timing (PVDD=PVDD1=VDD=VDDI= 3.3V, AGND= 0V, TA=25°C)

Parallel 24-bit RGB Interface Timing Table							
Item		**Symbol**	**Min.**	**Typ.**	**Max.**	**Unit**	**Remark**
DCLK Frequency		Fclk	23	25	27	MHz	
HSYNC	Period Time	Th	808	816	896	DCLK	
	Display Period	Thdisp		800		DCLK	
	Back Porch	Thbp	4	8	48	DCLK	
	Front Porch	Thfp	4	8	48	DCLK	
	Pulse Width	Thw	2	4	8	DCLK	
VSYNC	Period Time	Tv	492	496	504	HSYNC	
	Display Period	Tvdisp		480		HSYNC	
	Back Porch	Tvbp	6	8	12	HSYNC	
	Front Porch	Tvfp	6	8	12	HSYNC	
	Pulse Width	Tvw	2	4	8	HSYNC	

Note: 1. The minimum blanking time depends on the GIP timing of the panel specification

2. To ensure the compatibility of different panels, it is recommended to use the typical setting.

3. It is necessary to keep Tvbp =8 and Thbp =8 in sync mode. DE mode is unnecessary to keep it.

8. Power On/Off Sequence

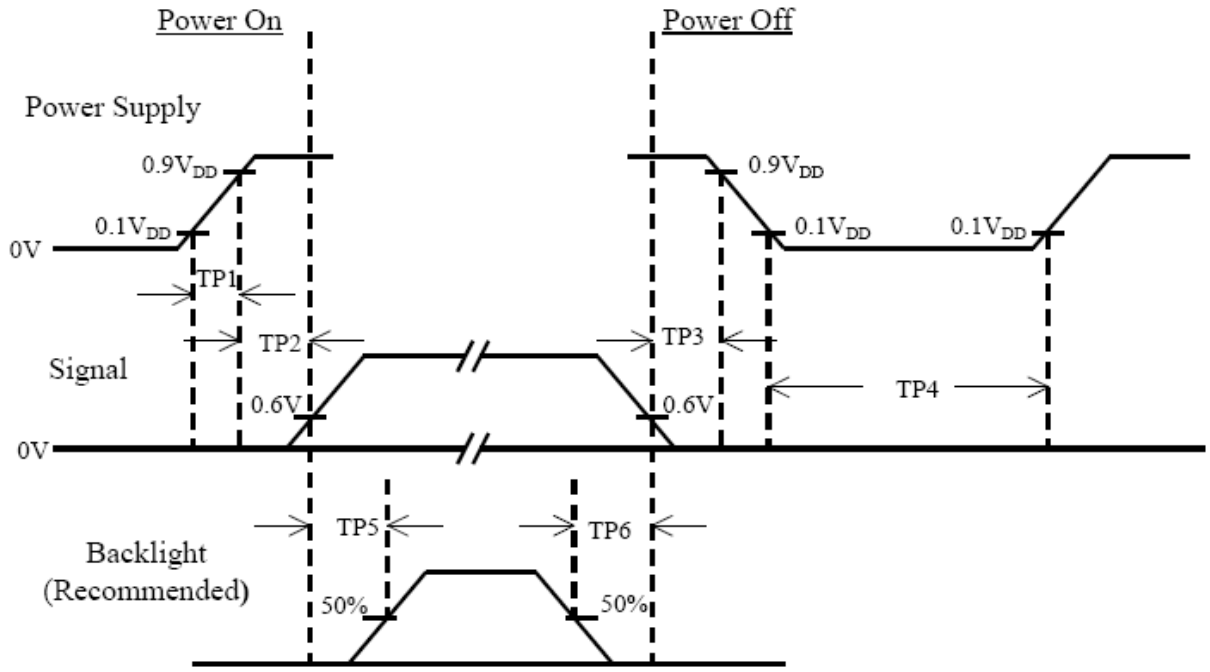

Item	Min.	Typ.	Max.	Unit	Remark
TP1	0.5	--	10	msec	
TP2	0	--	50	msec	
TP3	0	--	50	msec	
TP4	500	--	--	msec	
TP5	200	--	--	msec	
TP6	200	--	--	msec	

Note(1) The supply voltage of the external system for the module input should be the same as the definition of VCC.

Note(2) Apply the lamp voltage within the LCD operation range. When the back-light turns on before the LCD operation or the LCD turns off before the back-light turns off, the display may momentarily become white.

Note(3) In case of VCC = off level, please keep the level of input signal on the low or keep a high impedance.

Note(4) TP4 should be measured after the module has been fully discharged between power off and on period.

Note(5) Interface signal shall not be kept at high impedance when the power is on.

9. Displayed Color and Input Data

Data Signal

COLOR		INPUT DATA																							
		R DATA								G DATA								B DATA							
		R7	R6	R5	R4	R3	R2	R1	R0	G7	G6	G5	G4	G3	G2	G1	G0	B7	B6	B5	B4	B3	B2	B1	B0
		MSB							LSB	MSB							LSB	MSB							LSB
BASIC COLOR	BLACK	0	0	0	0	0	0	0	0	0	0	0	0	0	0	0	0	0	0	0	0	0	0	0	0
	RED(255)	1	1	1	1	1	1	1	1	0	0	0	0	0	0	0	0	0	0	0	0	0	0	0	0
	GREEN(255)	0	0	0	0	0	0	0	0	1	1	1	1	1	1	1	1	0	0	0	0	0	0	0	0
	BLUE(255)	0	0	0	0	0	0	0	0	0	0	0	0	0	0	0	0	1	1	1	1	1	1	1	1
	CYAN	0	0	0	0	0	0	0	0	1	1	1	1	1	1	1	1	1	1	1	1	1	1	1	1
	MAGENTA	1	1	1	1	1	1	1	1	0	0	0	0	0	0	0	0	1	1	1	1	1	1	1	1
	YELLOW	1	1	1	1	1	1	1	1	1	1	1	1	1	1	1	1	0	0	0	0	0	0	0	0
	WHITE	1	1	1	1	1	1	1	1	1	1	1	1	1	1	1	1	1	1	1	1	1	1	1	1
RED	RED(1)	0	0	0	0	0	0	0	1	0	0	0	0	0	0	0	0	0	0	0	0	0	0	0	0
	RED(2)	0	0	0	0	0	0	1	0	0	0	0	0	0	0	0	0	0	0	0	0	0	0	0	0
	RED(255)	1	1	1	1	1	1	1	1	0	0	0	0	0	0	0	0	0	0	0	0	0	0	0	0
GREEN	GREEN(1)	0	0	0	0	0	0	0	0	0	0	0	0	0	0	0	1	0	0	0	0	0	0	0	0
	GREEN(2)	0	0	0	0	0	0	0	0	0	0	0	0	0	0	1	0	0	0	0	0	0	0	0	0
	GREEN(255)	0	0	0	0	0	0	0	0	1	1	1	1	1	1	1	1	0	0	0	0	0	0	0	0
BLUE	BLUE(1)	0	0	0	0	0	0	0	0	0	0	0	0	0	0	0	0	0	0	0	0	0	0	0	1
	BLUE(2)	0	0	0	0	0	0	0	0	0	0	0	0	0	0	0	0	0	0	0	0	0	0	1	0
	BLUE(255)	0	0	0	0	0	0	0	0	0	0	0	0	0	0	0	0	1	1	1	1	1	1	1	1

10. Reliability Test Conditions

Test Item	Test Conditions	Note
High Temperature Operation	85±3°C , t=240 hrs	
Low Temperature Operation	-30±3°C , t=240 hrs	
High Temperature Storage	85±3°C , t=240 hrs	(1),(2)
Low Temperature Storage	-30±3°C , t=240 hrs	(1),(2)
Storage Humidity Test	60 °C, Humidity 90%, 240 hrs	(1),(2)
Vibration Test (Packing)	Sweep frequency : 10 ~ 50 ~ 10 Hz/1min Amplitude : 0.75mm Test direction : X.Y.Z/3 axis Duration : 30min/each axis	(2)

Note(1) Condensation of water is not permitted on the module.

Note(2) The module should be inspired after 1 hour storage in normal conditions (15~35℃, 45~65%RH).

Note(3) The module shouldn't be tested over one condition, and all the tests are independent.

Note(4) All reliability tests should be done without the protective film.

Definitions of life end point:

- Current drain should be smaller than the specific value.
- Function of the module should be maintained.
- Appearance and display quality should not have degraded noticeably.
- Contrast ratio should be greater than 50% of initial value.

11. Use Precautions

11.1 Handling precautions

(1) The polarizing plate may break easily so be careful when handling it. Do not touch, press or rub it with a hard-material tool like tweezers.

(2) Do not touch the polarizing plate surface with bare hands so as not to make it dirty. If the surface or other related part of the polarizing plate is dirty, soak a soft cotton cloth or chamois leather in benzine and wipe off with it. Do not use chemical liquids such as acetone, toluene and isopropyl alcohol. Failure to do so may bring chemical reaction phenomena and deteriorations.

(3) Remove any spit or water immediately. If it is left for hours, the suffered part may deform or decolorize.

(4) If the LCD element breaks and any LC stuff leaks, do not suck or lick it. Also if LC stuff is stuck on your skin or clothing, wash thoroughly with soap and water immediately.

11.2 Installing precautions

(1) The PCB has many ICs that may be damaged easily by static electricity. To prevent breaking by static electricity from the human body and clothing, earth the human body properly using the high resistance and discharge static electricity during the operation. In this case, however, the resistance value should be approx. 1MΩ and the resistance should be placed near the human body rather than the ground surface. When the indoor space is dry, static electricity may occur easily so be careful. We recommend the indoor space should be kept with humidity of 60% or more. When a soldering iron or other similar tool is used for assembly, be sure to earth it.

(2) When installing the module and ICs, do not bend or twist them. Failure to do so may crack LC element and cause circuit failure.

(3) To protect LC element, especially polarizing plate, use a transparent protective plate (e.g., acrylic plate, glass etc) for the product case.

(4) Do not use an adhesive like a both-side adhesive tape to make LCD surface (polarizing plate) and product case stick together. Failure to do so may cause the polarizing plate to peel off.

11.3 Storage precautions

(1) Avoid a high temperature and humidity area. Keep the temperature between 0°C and 35°C and also the humidity under 60%.

(2) Choose the dark spaces where the product is not exposed to direct sunlight or fluorescent light.

(3) Store the products as they are put in the boxes provided from us or in the same conditions as we recommend.

11.4 Operating precautions

(1) Do not boost the applied drive voltage abnormally. Failure to do so may break ICs. When applying power voltage, check the electrical features beforehand and be careful. Always turn off the power to the LC module controller before removing or inserting the LC module input connector. If the input connector is removed or inserted while the power is turned on, the LC module internal circuit may break.

(2) The display response may be late if the operating temperature is under the normal standard, and the display may be out of order if it is above the normal standard. But this is not a failure; this will be restored if it is within the normal standard.

(3) The LCD contrast varies depending on the visual angle, ambient temperature, power voltage etc. Obtain the optimum contrast by adjusting the LC dive voltage.

(4) When carrying out the test, do not take the module out of the low-temperature space suddenly. Failure to do so will cause the module condensing, leading to malfunctions.

(5) Make certain that each signal noise level is within the standard (L level: 0.2Vdd or less and H level: 0.8Vdd or more) even if the module has functioned properly. If it is beyond the standard, the module may often malfunction. In addition, always connect the module when making noise level measurements.

(6) The CMOS ICs are incorporated in the module and the pull-up and pull-down function is not adopted for the input so avoid putting the input signal open while the power is ON.

(7) The characteristic of the semiconductor element changes when it is exposed to light emissions, therefore ICs on the LCD may malfunction if they receive light emissions. To prevent these malfunctions, design and assemble ICs so that they are shielded from light emissions.

(8) Crosstalk occurs because of characteristics of the LCD. In general, crosstalk occurs when the regularized display is maintained. Also, crosstalk is affected by the LC drive voltage. Design the contents of the display, considering crosstalk.

11.5 Other

(1) Do not disassemble or take the LC module into pieces. The LC modules once disassembled or taken into pieces are not the guarantee articles.

(2) The residual image may exist if the same display pattern is shown for hours. This residual image, however, disappears when another display pattern is shown. Or, the drive is interrupted and left for a while. But this is not a problem on reliability.

(3) Do not keep the LCD at the same display pattern continually. The residual image will happen and it will damage the LCD. Please use screen saver.

(4) AMIPRE will provide one year warrantee for all products and three months warrantee for all repairing products.

12. Outline Dimension

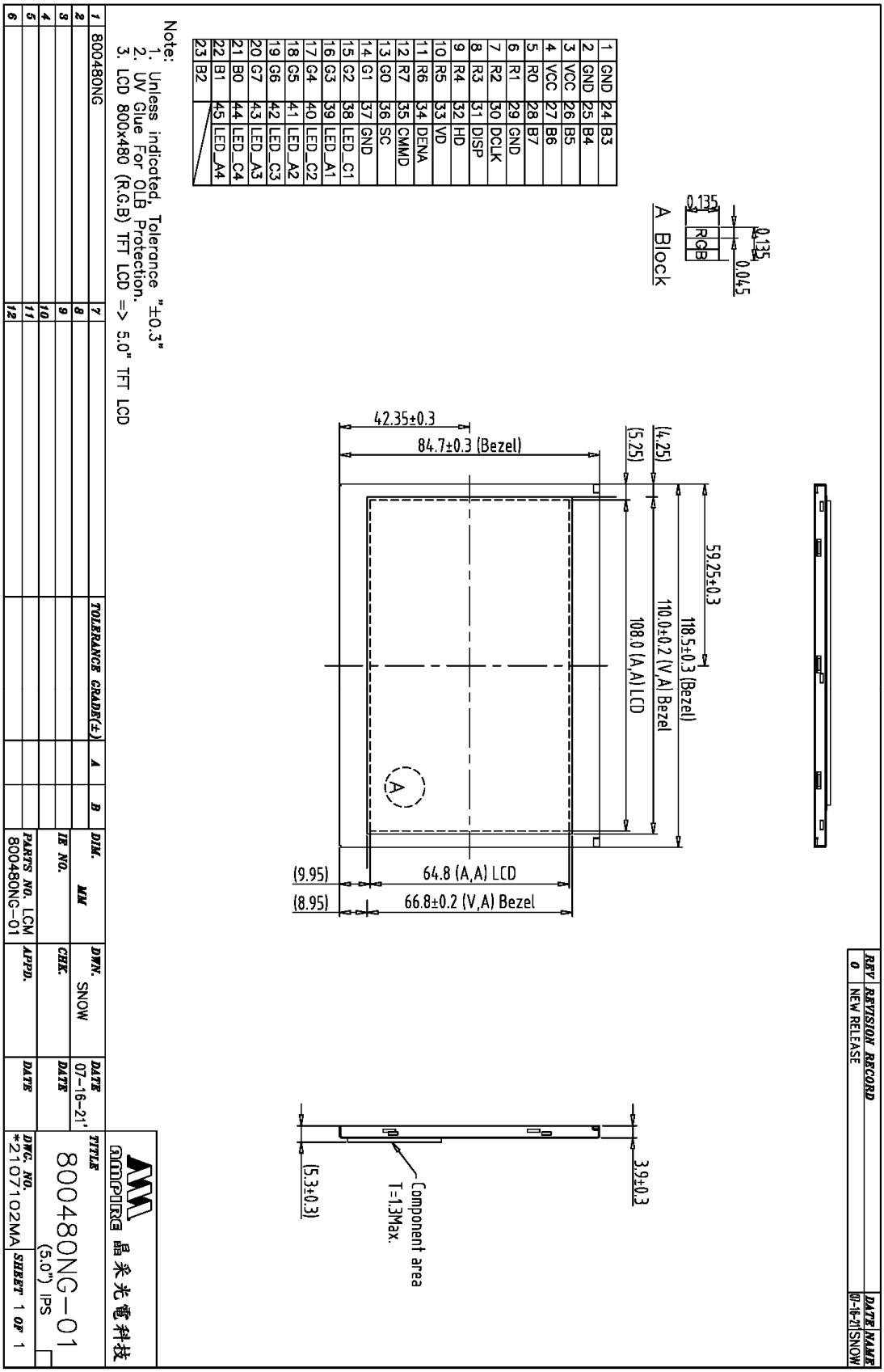

REV	REVISION RECORD	DATE	NAME
0	NEW RELEASE	07-16-21	SNOW

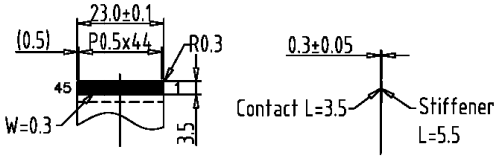

B Block

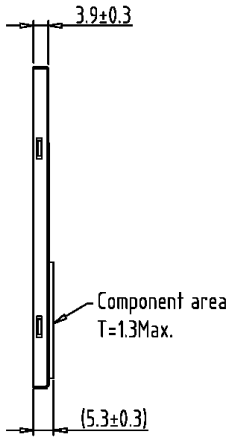

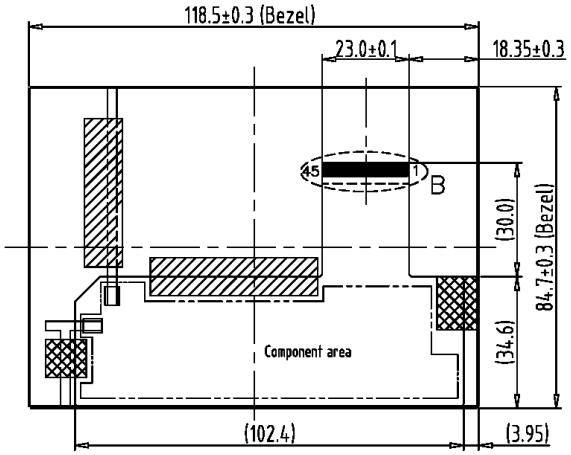

Back view

1	GND	24	B3
2	GND	25	B4
3	VCC	26	B5
4	VCC	27	B6
5	R0	28	B7
6	R1	29	GND
7	R2	30	DCLK
8	R3	31	DISP
9	R4	32	HD
10	R5	33	VD
11	R6	34	DENA
12	R7	35	CMMD
13	G0	36	SC
14	G1	37	GND
15	G2	38	LED_C1
16	G3	39	LED_A1
17	G4	40	LED_C2
18	G5	41	LED_A2
19	G6	42	LED_C3
20	G7	43	LED_A3
21	B0	44	LED_C4
22	B1	45	LED_A4
23	B2		

Note:
1. Unless indicated, Tolerance "±0.3"
2. UV Glue For OLB Protection.
3. LCD 800x480 (R.G.B) TFT LCD => 5.0" TFT LCD

AMPIRE 晶采光電科技

1	800480NG	7		TOLERANCE GRADE(±)	A	B	DIM. MM	DWN. SNOW	DATE 07-16-21	TITLE 800480NG-01 (5.0") IPS	
2		8									
3		9					IE NO.	CHK.	DATE		
4		10									
5		11					PARTS NO. LCM-1 800480NG-01	APPD.	DATE	DWG. NO. *2107103MA	SHEET 1 OF 1
6		12									

13. Package

TBD

FORTEC GROUP

Our company network supports you worldwide with offices in Germany, Austria, Switzerland, Benelux, Egypt, the UK and the USA. For more information please contact:

FORTEC GROUP

FORTEC Elektronik AG | Augsburger Straße 2b | 82110 Germering
+49 89 894450-0
info@fortecag.de | www.fortecag.de

FORTEC INTEGRATED

FORTEC Integrated GmbH | Augsburger Straße 2b | 82110 Germering
+49 89 894363-0
info@fortec-integrated.de | www.fortec-integrated.de

FORTEC POWER

FORTEC Power GmbH | Lise-Meitner-Straße 3 | 64560 Riedstadt
+49 6158 8285-0
weborder@fortec-power.de | www.fortec-power.de

FORTEC UNITED KINGDOM

FORTEC Technology UK Ltd. | Osprey House | 1 Osprey Court
Hinchingbrooke Business Park | Huntingdon | Cambridgeshire | PE29 6FN
+44 1480 411600 | info@fortec.uk | www.fortec.uk

FORTEC UNITED STATES

FORTEC United States, Corp. | 87 Raynor Avenue Unit 1 | Ronkonkoma
NY | 11779 | +1 631 5804360
info@fortec.us | www.fortec.us

FORTEC CZECH REPUBLIC

FORTEC Czech Republic s.r.o. | Přátelství 275 | 330 02 Dýšina
+49 89 894363-0
info@fortec.cz | www.fortec.cz

FORTEC SWITZERLAND

FORTEC Switzerland AG | Bahnhofstraße 3 | 5436 Würenlos
+41 44 7446111
info@fortec.ch | www.fortec.ch

FORTEC EGYPT

FORTEC Electronic Design and Solution Egypt SMLC | Linx Business Park
Unit B318 | Smart Village | Giza Governorate
+20 120 1146222 | info@fortec.eg | www.fortec.eg

FORTEC BENELUX

FORTEC Benelux B.V. | Everdenberg 79 | 4902 TT Oosterhout
+31 162 515458
info@fortec-benelux.com | www.fortec-benelux.com